结构特点与用途

1. 全关时手轮按顺时针方向旋转。
2. 可以安装在管道的任何位置上，介质从下往上流。
3. 不锈钢截止阀适用于各类腐蚀性介质的管道上,有良好的防腐性和足够的强度。
4. 合金钢截止阀适用于耐高温的蒸气、油品管道上，具有耐高温特点。

Structure features and application:

1. Fully closed when hand wheel rotates clockwise.
2. Able to be mounted at any position of the pipeline with medium flows in a down-up way.
3. Stainless Globe valve has good anticorrosive and well enough intensity, suitable for various corrosive medium pipelines.
4. Alloy steel globe valve has high temperature resistance, suitable for high temperature steam and oil pipelines.

设计、制造标准

1. 设计制造按GB/T 12235-89
2、法兰连接尺寸按JB/T 79-94
3、阀门检查和试验按GB/T 13927-92

Standard for design and manufacture

1、Design Manufacfure According to GB/T 12235-89
2、Flange Dimension According to JB/T 79-94
3、Valve Check and Test According to GB/T 13927-92

主要性能规范 Main property and specification

试验压力 Test pressure

公称压力PN(MPa) Nominal Pressure	1.6	2.5	4.0	6.4	10.0	16.0
壳体强度试验 Shell strength test	2.4	3.75	6.0	9.6	15	24
上密封试验 Back seal test	1.76	2.75	4.4	7.04	11	17.6
密封试验 Seal test (Mpa)	1.76	2.75	4.4	7.04	11	17.6

使用范围 Applicable scope

产品类型 Product type	适用介质 Suitable medium	适用温度(℃) Working temperature
J41 H/Y -C (type)型 J941 H/Y -C(type)型	水、蒸汽、油品. Water,steam, oil goods	≤425
J41W-P (type)型 J941W-P(type)型	硝酸类 Nitric acid	≤200
J41W-R (type)型 J941W-R(type)型	醋酸类 Acetic acid	≤200
J41Y-I (type)型 J941Y-I(type)型	水、蒸汽、油品. Water,steam, oil goods	≤550

三千控制阀网 www.cv3000.com

主要零件材料 Materials for main parts

产品类型 Product type	零件名称 Part name							
	阀体，阀盖 Body, bonnet	阀杆 Valve stem	阀瓣 Disc	密封面 Sealing face	阀杆螺母 Yoke nut	填料 Packing	紧固件 Fastener	手轮 Handwheel
J41 H/Y -C (type)型 J941 H/Y -C(type)型	25. WCB	铬不锈钢 Cr. stainless steel	2Cr13 25	H:不锈钢 Y:钴基硬质合金钢 H:Stainless steel Y:Co-based hard alloy steel	ZQA19-4 铝青铜 Al bronze	柔性石墨 Flexible graphite	优质碳钢 High-grade carbon steel	WCB
J41W-P (type)型 J941 W-P(type)型	铬镍钛钢 Cr.Ni.Ti.steel	铬镍钛钢 Cr.Ni.Ti.steel	铬镍钛钢 Cr.Ni.Ti.steel	铬镍钛钢 Cr.Ni.Ti.steel	ZQA19-4 铝青铜 Al bronze	柔性石墨 Flexible graphite	不锈钢 Stainless steel	WCB
J41W-R (type)型 J941W-R(type)型	铬镍钼钛钢 Cr.Ni.Mo.Ti steel	铬镍钼钛钢 Cr.Ni.Mo.Ti steel	铬镍钼钛钢 Cr.Ni.Mo.Ti steel	铬镍钼钛钢 Cr.Ni.Mo.Ti steel	ZQA19-4 铝青铜 Al bronze	柔性石墨 Flexible graphite	不锈钢 Stainless steel	WCB
J41Y-I (type)型 J941Y-I (type)型	铬钼钢 Cr.Mo.steel	铬钼钢 Cr.Mo.steel	合金钢 Alloy steel	钴基硬质合金钢 Co-based hard alloy steel	ZQA19-4 铝青铜 Al bronze	柔性石墨 Flexible graphite	合金钢 Alloy steel	WCB

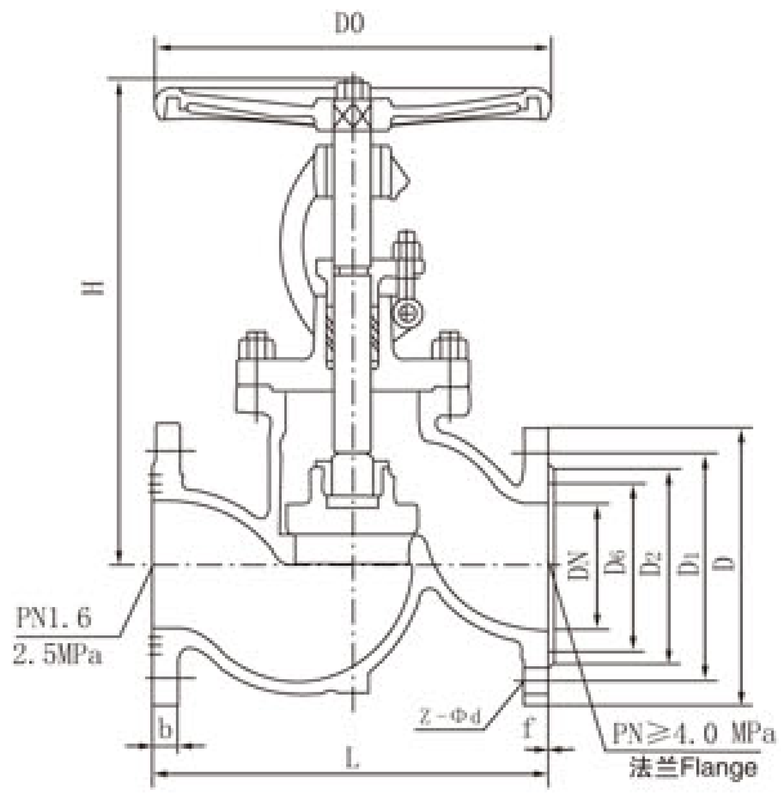

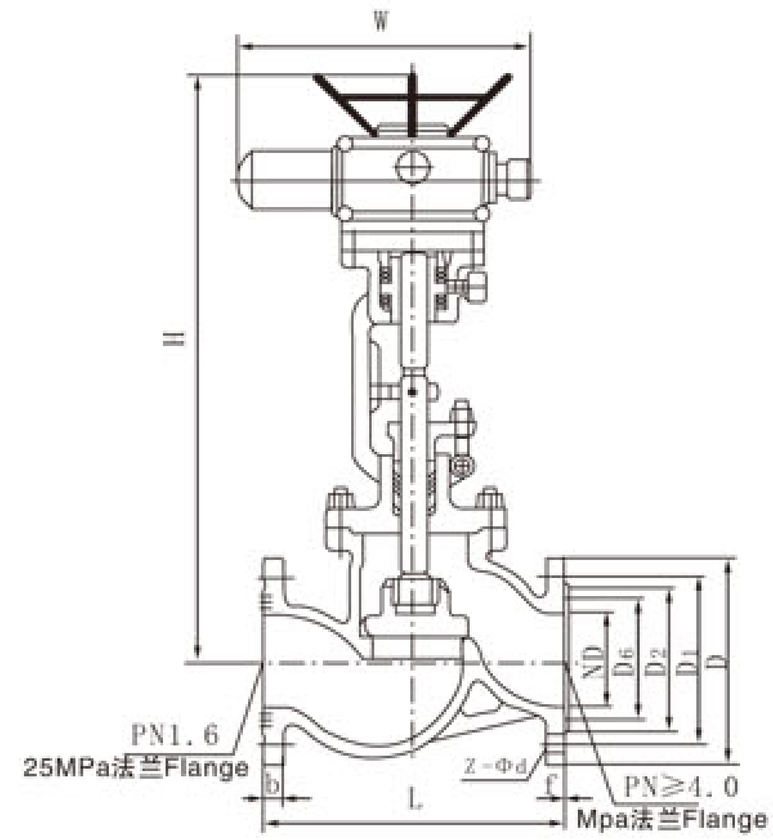

主要连接及外形尺寸 Main connection and external dimensions(mm)

公称通径 DN(mm) Nominal diameter	J41H/Y-25 J41W-25P J41W-25R J41W-25I J941H/Y-25 J941W-25P J941W-25R J941Y-25I										
	主要外形尺寸及连接尺寸(mm) Main external dimensions and connecting dimensions										电动装置 Electric actuator
	L	D	D_1	D_2	b	F	Z-Φd	H_{manual} H手	$H_{elec.}$ H电	D0	
10	130	90	60	40	16	2	4-14	198	-	120	ZB5
15	130	95	65	45	16	2	4-14	218	-	120	ZB5
20	150	105	75	55	16	2	4-14	258	-	140	ZB5
25	160	115	85	65	16	2	4-14	275	-	160	ZB5
32	180	135	100	78	18	2	4-18	280	-	180	ZB15
40	200	145	110	85	18	3	4-18	330	-	200	ZB15
50	230	160	125	100	20	3	4-18	350	645	240	ZB15
65	290	180	145	120	22	3	8-18	355	690	280	ZB15
80	310	195	160	135	22	3	8-18	400	715	280	ZB15
100	350	230	190	160	24	3	8-23	415	770	320	ZB20
125	400	270	220	188	28	3	8-25	460	780	360	ZB40
150	480	300	250	218	30	3	8-25	510	875	400	ZC45
200	600	360	310	278	34	3	12-25	710	967	400	ZC60
250	650	425	370	332	36	3	12-30	786	-	450	ZC90
300	750	485	430	390	40	4	16-30	925	-	500	ZC120

公称通径 DN(mm) Nominal diameter	J41H/Y-40 J41W-40P J41W-40R J41W-40I J941H/Y-40 J941W-40P J941W-40R J941Y-40I												
	主要外形尺寸及连接尺寸(mm) Main external dimensions and connecting dimensions												电动装置 Electric actuator
	L	D	D_1	D_2	D_6	B	f	f_2	z-Φd	H_{manual} H手	$H_{elec.}$ H电	D0	
10	130	90	60	40	35	16	2	4	4-14	198	-	120	ZB5
15	130	95	65	45	40	16	2	4	4-14	233	-	120	ZB5
20	150	105	75	55	51	16	2	4	4-14	275	-	140	ZB5
25	160	115	85	65	58	16	2	4	4-14	285	-	160	ZB5
32	180	135	100	78	66	18	2	4	4-18	302	-	180	ZB5
40	200	145	110	85	76	18	3	4	4-18	355	-	200	ZB15
50	230	160	125	100	88	20	3	4	4-18	373	645	240	ZB15
65	290	180	145	120	110	22	3	4	8-18	408	690	280	ZB15
80	310	195	160	135	121	22	3	4	8-18	436	715	320	ZB20
100	350	230	190	160	150	24	3	4.5	8-23	480	770	360	ZB40
125	400	270	220	188	176	28	3	4.5	8-25	558	782	400	ZC45
150	480	300	250	218	204	30	3	4.5	8-25	611	875	400	ZC60
200	600	375	320	282	260	38	3	4.5	12-30	720	1160	400	ZC90

三千控制网网
www.cv3000.com

主要连接及外形尺寸 Main connection and external dimensions(mm)

公称通径 DN(mm) Nominal diameter	主要外形尺寸及连接尺寸(mm) Main external dimensions and connecting dimensions												电动装置 Electric device
	L	D	D_1	D_2	D_6	b	f	f_2	Z-Φd	$H_{手}$	$H_{电}$	D0	
J41H/Y-64 J41W/Y-64P/R J41Y-64 I J941H-64 J941W/Y-64P/R J941Y-64 I													
10	170	100	70	50	35	18	2	4	4-14	195	-	120	ZB5
15	170	105	75	55	40	18	2	4	4-14	198	-	140	ZB5
20	190	125	90	68	51	20	2	4	4-18	228	-	160	ZB5
25	210	135	100	78	58	22	2	4	4-18	275	-	180	ZB5
32	230	150	110	82	66	24	2	4	4-23	325	-	200	ZB5
40	260	165	125	95	76	24	3	4	4-23	360	-	240	ZB15
50	300	175	135	105	88	26	3	4	4-23	410	710	280	ZB15
65	340	200	160	130	110	28	3	4	8-23	450	750	320	ZB15
80	380	210	170	140	121	30	3	4	8-23	485	785	360	ZB40
100	430	250	200	168	150	32	3	4.5	8-25	537	837	400	ZC45
125	500	295	240	202	176	36	3	4.5	8-30	631	-	400	ZC60
150	550	340	280	240	204	38	3	4.5	8-34	646	-	450	ZC90
200	650	405	345	300	260	44	3	4.5	12-34	813	-	500	ZC120
J41H/Y-100 J41W/Y-100P/R J41H/Y-100 I J941H/Y-100 J941W-100P/R J941H/Y-100 I													
10	170	100	70	50	35	20	2	4	4-14	198	-	120	ZB5
15	170	105	75	55	40	20	2	4	4-14	202	-	140	ZB5
20	190	125	90	68	51	22	2	4	4-18	228	-	160	ZB5
25	210	135	100	78	58	24	2	4	4-18	250	-	180	ZB15
32	230	150	110	82	66	24	2	4	4-23	326	-	220	ZB15
40	260	165	125	95	76	26	3	4	4-23	359	-	240	ZB15
50	300	195	145	112	88	28	3	4	4-25	414	710	280	ZB15
65	340	220	170	138	110	32	3	4	8-25	434	750	320	ZB20
80	380	230	180	148	121	34	3	4	8-25	547	785	400	ZB30
100	430	265	210	172	150	38	3	4.5	8-30	621	837	450	ZC45
125	500	310	250	210	176	42	3	4.5	8-34	732	-	450	ZC60
150	550	350	290	250	204	46	3	4.5	12-34	840	-	500	ZC120
200	650	430	360	312	260	54	3	4.5	12-41	925	-	550	ZC180
J41H/Y-160 J41W/Y-160P/R J41Y-160 I J941H/Y-160 J941W-160P/R J941Y-160 I													
15	170	110	75	52	40	24	2	4	4-18	148	-	140	ZB15
20	190	130	90	62	51	26	2	4	4-23	156	-	160	ZB15
25	210	140	100	72	58	28	2	4	4-23	125	-	180	ZB20
32	230	165	115	85	66	30	2	4	4-25	200	-	200	ZB20
40	260	175	125	92	76	32	3	4	4-27	231	-	240	ZB40
50	300	215	165	132	88	36	3	4	8-25	262	-	250	ZC60
65	340	245	190	152	110	44	3	4	8-30	303	-	320	ZC60
80	380	260	205	168	121	46	3	4	8-30	341	-	400	ZC90
100	430	300	240	200	150	48	3	4.5	8-34	485	-	450	ZC120

一手控制阀网 www.cv3000.com

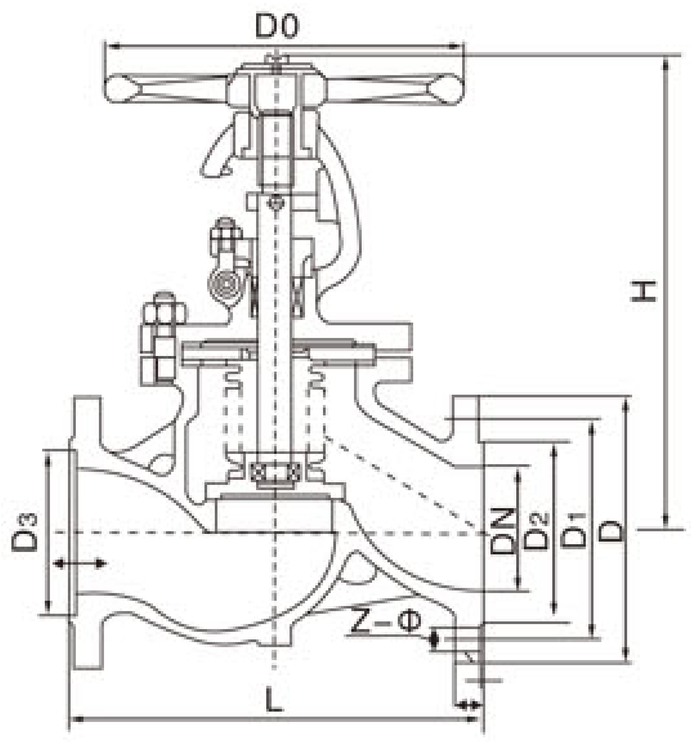

主要连接及外形尺寸 Main connection and external dimensions(mm)

DN	L	D	D_1	D_2	D_3	b	f	f_1	D0	H	Z-Φ
2.5(25)											
15	130	95	65	46	/	14	2	/	100	236	4-14
20	150	105	75	56	/	16	2	/	100	242	4-14
25	160	115	85	65	/	16	3	/	125	286	4-14
32	180	140	100	76	/	18	3	/	125	295	4-18
40	200	150	110	84	/	18	3	/	150	330	4-18
50	230	165	125	99	/	20	3	/	150	350	4-18
65	290	185	145	118	/	22	3	/	200	400	8-18
80	310	200	160	132	/	24	3	/	200	430	8-18
100	350	235	190	156	/	24	3	/	250	465	8-22
125	400	270	200	184	/	26	3	/	250	505	8-26
150	480	300	250	211	/	28	3	/	300	613	8-26
200	600	360	310	274	/	30	3	/	420	714	12-26
250	730	425	370	330	/	32	3	/	500	810	12-30
300	850	485	430	389	/	34	4	/	670	910	16-30
4.0(40)											
15	130	95	65	45	40	16	2	4	100	236	4-14
20	150	105	75	55	51	16	2	4	100	242	4-14
25	160	115	85	65	58	16	2	4	125	286	4-14
32	180	135	100	78	66	18	2	4	125	295	4-18
40	200	145	110	85	76	18	3	4	150	330	4-18
50	230	160	125	100	88	20	3	4	150	350	4-18
65	290	180	145	120	110	22	3	4	200	400	8-18
80	310	195	160	135	121	22	3	4	200	430	8-18
100	350	230	190	160	150	24	3	4.5	250	465	8-23
125	400	270	220	188	176	28	3	4.5	250	505	8-25
150	480	300	250	218	204	30	3	4.5	300	613	8-25
200	600	385	320	252	260	38	3	4.5	420	714	12-30
250	730	445	385	345	313	42	3	4.5	500	810	12-34
300	850	510	450	408	364	46	4	4.5	670	910	16-34

三千控制阀网 www.cv3000.com

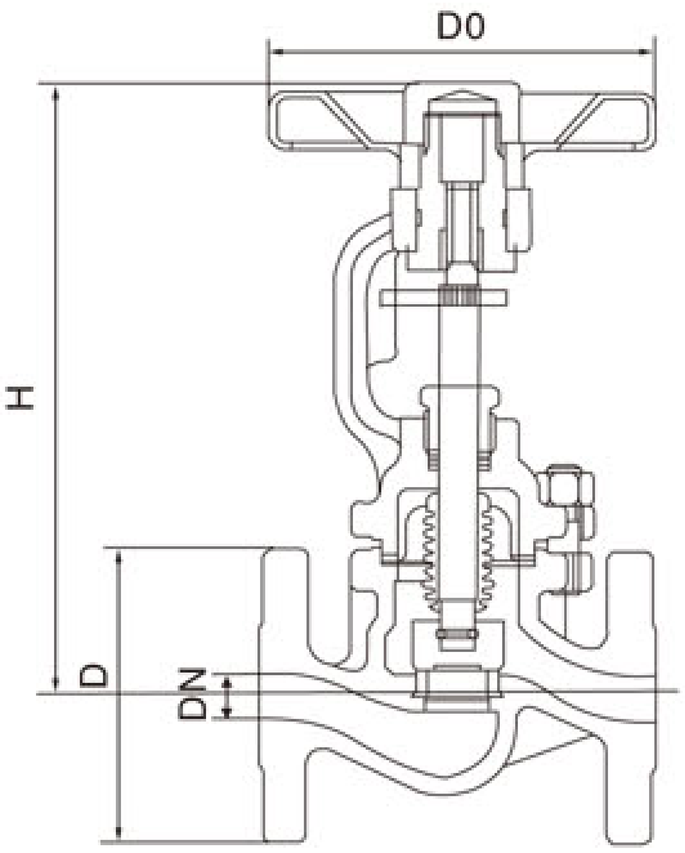

主要连接及外形尺寸 Main connection and external dimensions(mm)

DN	L	l	H	D0		PN16			PN25			PN40		
				PN16 PN25	PN40	D	D_1	z-Φd	D	D_1	z-Φd	D	D_1	z-Φd
15	130	90	191	125	125	95	65	4-14	95	65	4-14	95	65	4-14
20	150	95	191	125	125	105	75	4-14	105	75	4-14	105	75	4-14
25	160	100	197	125	125	115	85	4-14	115	85	4-14	115	85	4-14
32	180	105	200	125	125	140	100	4-18	140	100	4-18	140	100	4-18
40	200	115	218	150	150	150	110	4-18	150	110	4-18	150	110	4-18
50	230	125	220	150	150	165	125	4-18	165	125	4-18	165	125	4-18
65	290	145	238	175	175	185	145	4-18	185	145	8-18	185	145	8-18
80	310	155	257	175	225	200	160	8-18	200	160	8-18	200	160	8-18
100	350	175	340	225	300	235	180	8-18	235	190	8-22	235	190	8-22
125	400	200	360	225	300	270	210	8-18	270	220	8-26	270	220	8-26
150	480	225	390	300	300	300	240	8-22	300	250	8-26	300	250	8-26
175	550	250	505	400	-	330	270	8-22	330	280	12-26	-	-	-
200	600	275	530	400	-	360	295	12-22	360	310	12-26	-	-	-
250	730	325	665	520	-	425	355	12-26	425	370	12-30	-	-	-
300	850	375	720	520	-	485	410	12-26	485	430	16-30	-	-	-
350	980	425	860	520	-	555	470	16-26	555	490	16-33	-	-	-
400	1100	475	1010	520	-	620	525	16-30	620	550	16-36	-	-	-

三千控制阀网 www.cv3000.com

柱塞阀
PLUG VALVE

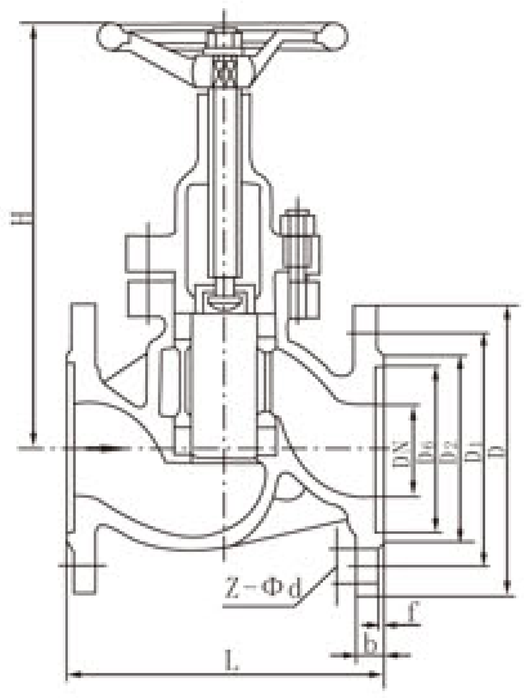

主要性能规范 Main property and specification

公称压力PN Nominal pressure	1.6	2.5	4.0	6.4	10.0	MPa
壳体试验压力PT Shell pressure test	2.4	3.75	6.0	9.6	15.0	
高压密封试验压力 High pressure sealing test	1.76	2.75	4.4	7.04	11.0	
低压气密封试验压力 Low pressure sealing test	0.6					
适用介质 Applicable medium	C 水,油,蒸汽 Water, oil, steam		P 硝酸类 Nitric acid		R 醋酸类 Acetic acid	
适用温度 Applicable temperature	≤425℃		≤200℃			

设计、制造标准

1. 设计制造按GB/T 12235-89
2、法兰连接尺寸按JB/T 79-94
3、阀门检查和试验按GB/T 13927-92

Standard for design and manufacture

1、Design Manufacture According to GB/T 12235-89
2、Flange Dimension According toJB/T 79-94
3、Valve Check and Test According to GB/T 13927-92

主要连接及外形尺寸 Main connection and external dimensions(mm)

PN(MPa)	DN	L	H	D	D_1	D_2	D_6	b	f	Z-Φd	重量(kg) Weight
U41S/F-16Z/P/R U41H/Y-16C/P/R	15	130	128	95	65	45		14	2	4-14	3
	20	150	165	105	75	55		14	2	4-14	5
	25	160	190	115	85	65		14	2	4-14	7
	32	180	216	135	100	78		16	2	4-18	8
	40	200	236	145	110	85		16	3	4-18	12
	50	230	250	160	125	100		16	3	4-18	16
	65	290	255	180	145	120		18	3	4-18	22
	80	310	255	195	160	135		20	3	8-18	27
	100	350	259	215	180	155		20	3	8-18	40
	125	400	352	245	210	185		24	3	8-18	72
	150	480	362	280	240	210		26	3	8-23	97
	200	600	385	335	295	265		26	3	12-23	205
U41S/F-25/40C/P/R U41H/Y-25/40C/P/R	15	130	133	95	65	45	40	16	2	4-14	4
	20	150	178	105	75	55	51	16	2	4-14	6
	25	160	180	115	85	65	58	16	2	4-14	7
	32	180	195	135	100	78	66	18	2	4-18	10
	40	200	220	145	110	85	76	18	3	4-18	13
	50	230	250	160	125	100	88	20	3	4-18	17
	65	290	272	180	145	120	110	22	3	8-18	24
	80	310	275	195	160	135	121	22	3	8-18	33
	100	350	312	230	190	160	150	24	3	8-23	49
	125	400	365	270	220	188	176	28	3	8-25	87
	150	480	410	300	250	218	204	30	3	8-25	115
	200	600	450	360/375	310/320	278/282	260	34/38	3	12-25/30	210
U41S/F-64C/P/R U41H/Y-64C/P/R	15	170	145	105	75	55	40	18	2	4-14	5
	20	190	195	125	90	68	51	20	2	4-18	7
	25	210	202	135	100	78	58	22	2	4-18	8
	32	230	226	150	110	82	66	24	2	4-23	12
	40	260	239	165	125	95	76	24	3	4-23	15
	50	300	265	175	135	105	88	26	3	4-23	19
	65	340	287	200	160	130	110	28	3	8-23	26
	80	380	301	210	170	140	121	30	3	8-23	37
	100	430	346	250	200	168	150	32	3	8-25	55

三千控制阀网 www.cv3000.com

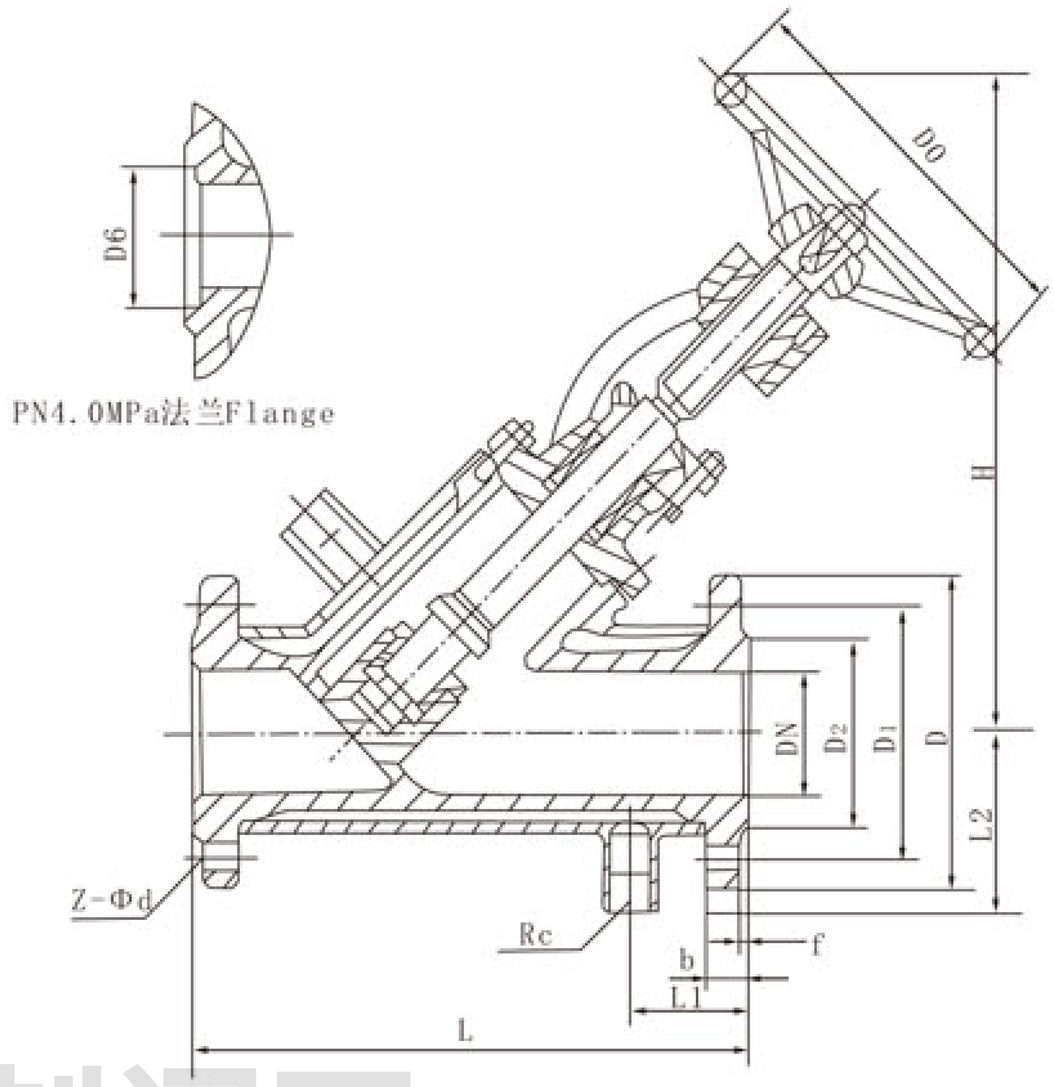

三千控制阀网
www.cv3000.com

结构特点与用途 Structure features and application:

该阀适用于各类需要保温的设备管路上，尤其适用于易结晶．粉状或颗粒介质。

The valve is suitable for all sorts of pipeline needing steam jacket:especially suitable for medium of crystal, powder or grain state.

主要性能规范 Main property and specification

型 号 Model	公称压力 Nominal pressure PN(MPa)	试验压力Ps(MPa) Test pressure		适用温度 Applicable temperature(℃)	适用介质 Applicable medium
		壳 体 Shell	密 封 Seal		
BJ45H-25	2.5	3.75	2.75	≤400	非腐蚀或弱腐蚀介质 Uncorrosion or weak-corrosion medium
BJ45H-40	4.0	6.0	4.4	≥400	非腐蚀或弱腐蚀介质 Uncorrosion or weak-corrosion medium
BJ45W/Y-25P	2.5	3.75	2.75	≥200	硝酸类介质 Nitric acid medium
BJ45W/Y-40P	4.0	6.0	4.4	≥200	硝酸类介质 Nitric acid medium
BJ45W/Y-25R	2.5	3.75	2.75	≥200	硝酸类介质 Nitric acid medium
BJ45W/Y-40R	4.0	6.0	4.4	≥200	硝酸类介质 Nitric acid medium

保温夹套直流式截止阀
STEAM JACKET Y-TYPE GLOBE VALVE

主要零件材料 Materials for main parts

零件名称 Part name / 型号 Model	阀体 阀盖 Body bonnet	阀瓣 阀杆 Disc stem	夹套 Jacket	密封面 Sealing face
BJ45H-25. BJ45H-40	WCB	2Cr13	20	H 为合金钢 H represents for alloy steel
BJ45W/Y-25P. BJ45W/Y-40P	ZG1Cr18Ni9Ti	1Cr18Ni9Ti	1Cr18Ni9Ti	W 为阀体本质 W represents for valve body Y 堆焊硬质合金 Y represents for welding hard alloy
BJ45W/Y-25R. BJ45W/Y-40R	ZG1Cr18Ni12Mo2Ti	1Cr18Ni12Mo2Ti	1Cr18Ni9Ti	W 为阀体本质 W represents for valve body Y 堆焊硬质合金 Y represents for welding hard alloy

主要连接及外形尺寸 Main connection and external dimensions(mm)

公称压力 Nominal Pressure PN(MPa)	公称通径 Nominal Diameter PN(mm)	尺 寸 Dimensions(mm)												
		L	L_1	L_2	H	R_C	D	D_1	D_2	D_6	b	f	z-Φd	D0
W C BJ45H-25P Y R	15	200	50	50	210	1/2 "	105	75	55	–	16	2	4-Φ14	120
	20	220	50	55	240	1/2 "	115	85	65	–	16	2	4-Φ14	140
	25	220	50	65	250	1/2 "	135	100	78	–	18	2	4-Φ18	160
	32	250	55	70	270	1/2 "	145	110	85	–	18	3	4-Φ18	160
	40	270	60	78	310	1/2 "	160	125	100	–	20	3	4-Φ18	160
	50	300	60	88	330	3/4 "	180	145	120	–	22	3	8-Φ18	240
	65	350	65	95	360	3/4 "	195	160	135	–	22	3	8-Φ18	240
	80	380	70	112	400	3/4 "	230	190	160	–	24	3	8-Φ23	280
	100	430	75	132	480	1 "	270	220	188	–	28	3	8-Φ25	300
	125	490	80	146	550	1 "	300	250	218	–	30	3	8-Φ25	320
	150	570	90	172	620	1 "	330	280	248	–	32	3	12-Φ25	360
	200	690	95	205	750	1 "	395	340	302	–	36	3	12-Φ30	400
W C BJ45H-40P Y R	15	200	50	50	210	1/2 "	105	75	55	51	16	2	4-Φ14	120
	20	220	50	55	240	1/2 "	115	85	65	58	16	2	4-Φ14	140
	25	220	50	65	250	1/2 "	135	100	78	66	18	2	4-Φ18	160
	32	250	55	70	270	1/2 "	145	110	85	76	18	2	4-Φ18	160
	40	270	60	78	310	1/2 "	160	125	100	88	20	3	4-Φ18	160
	50	300	60	88	330	3/4 "	180	145	120	110	22	3	8-Φ18	240
	65	350	65	95	360	3/4 "	195	160	135	121	22	3	8-Φ18	240
	80	380	70	112	400	3/4 "	230	190	160	150	24	3	8-Φ23	280
	100	430	75	132	480	1 "	270	220	188	176	28	3	8-Φ25	320
	125	490	80	146	550	1 "	300	250	218	204	30	3	8-Φ25	360
	150	570	90	172	620	1 "	350	295	258	234	34	3	12-Φ30	360
	200	690	95	205	750	1 "	415	355	315	278	40	3	12-Φ34	400

三千控制阀网 www.cv3000.com

J44H / L44Y -PN160、220、250、320

角式高压截止阀、节流阀
ANGLE HIGH PRESSURE GLOBE VALVE & THROTTLE VALVE

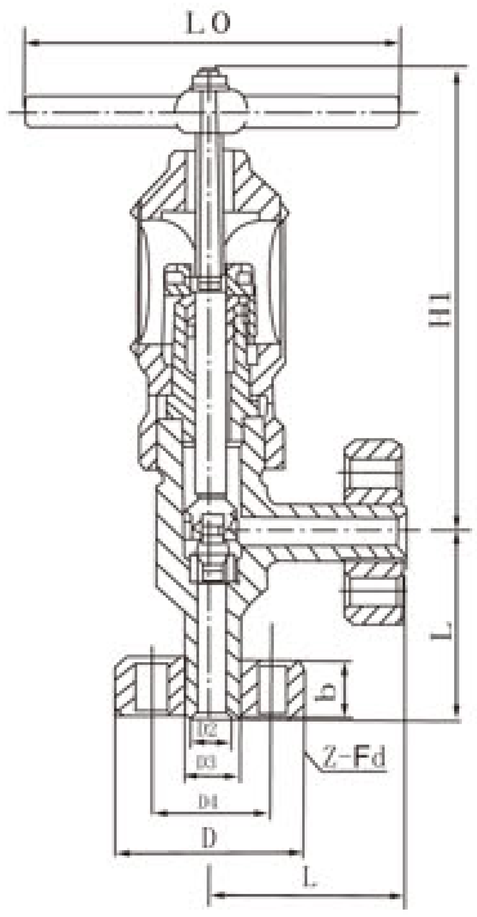

设计、制造标准

1. 设计制造按JB/T 450-92
2、法兰连接尺寸按JB/T 450-92
3、阀门检查和试验按JB/T 450-92

Standard for design and manufacture

1、Design Manufacfure According to JB/T 450-92
2、Flange Dimension According to JB/T 450-92
3、Valve Check and Test According to JB/T 450-92

用途：该阀门适用于下列各种，要作温度管路上作为控制介质流动的起闭器。

Application: This valve can serve as an open & close device to control the medium flow in the temperature pipeline.

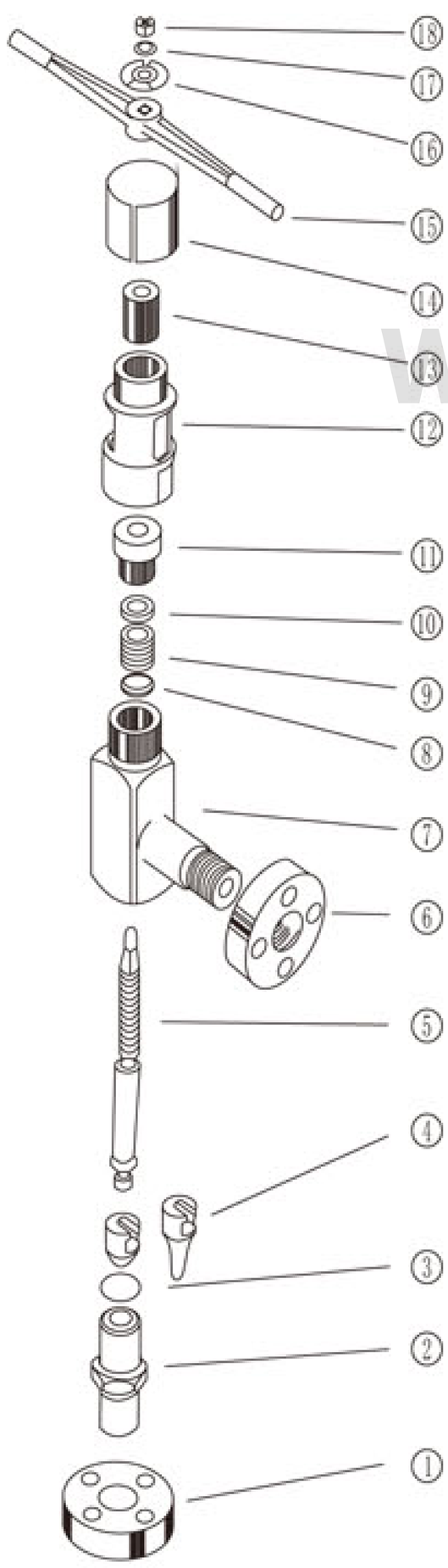

零件名称：
Name of Parts:

①法兰	Flange	⑩压环	Pressure ring
②阀底座	Valve base	⑪填料压盖	Gland
③"○"形密封圈	"○" seal ring	⑫阀盖	Bonnet
④阀板	Valve plate	⑬阀杆螺母	Yoke nut
⑤阀杆	Valve stem	⑭防尘罩	Dust cover
⑥法兰	Flange	⑮手柄	Handle
⑦阀体	Valve body	⑯铭牌	Name plate
⑧填料座	Filled base	⑰垫圈	Washer
⑨填料	Packing	⑱螺母	Nut

型号 Model	J44H-160 / L44Y-160 / J44H-220 / L44Y-220 / J44H-250 / L44Y-250 / 320	J44Y-160P / L44Y-160P / J44Y-220P / L44Y-220P / J44Y-250P / L44Y-250P / 320P	J44Y-160R / L44Y-160R / J44Y-220R / L44Y-220R / J44Y-250R / L44Y-250R / 320R
适用介质 Applicable medium	氨气、氢气 铜氨液、碱等 Nitrogen, hydrogen, cuprammonia, alkali, etc.	尿素、硝酸类 Urea and nitric acid kind	尿素、硝酸类 Urea and nitric acid kind
适用温度℃ Applicable temperature	-30～-100	-30～-200	-30～-200

主要连接及外形尺寸 Main connection and external dimensions(mm)

公称压力 Nominal Pressure PN(MPa)	公称通径 DN(mm) Nominal diameter	尺寸 Dimensions (mm)									
		L	L0	D_2	D_3	D_4	D	Z-d	b	H	H_1
16.0MPa 22.0MPa	15	105	250	20	M24×2	60	95	3-Φ18	25	291	
	25	120	350	27	M33×2	68	105	3-Φ18	30	356	
	32	135	350	35	M42×2	80	115	4-Φ18	35	376	
	40	165	450	45	M52×2	115	165	6-Φ26	40	485	
	50	190	650	58	M64×3	115	165	6-Φ26	50	574	
	65	215	650	70	M80×3	145	200	6-Φ26	60	596	
	80	260	850	90	M100×3	170	225	6-Φ33	65	772	
	100	290		115	M125×4	195	260	6-Φ36			
25.0MPa 32.0MPa	3	80	110	10	M14×1.5	42	70	3-Φ16	15	76	
	6	80	150	10	M14×1.5	42	70	3-Φ16	15	95	
	10	90	250	20	M24×2	60	95	3-Φ18	25	286	85
	15	105	250	27	M33×2	68	105	3-Φ18	30	291	95
	25	120	350	35	M42×2	80	115	4-Φ18	35	356	110
	32	135	350	41	M48×2	95	135	4-Φ22	40	376	120
	40	165	450	58	M64×2	115	165	6-Φ26	50	485	150
	50	190	650	70	M80×3	145	200	6-Φ29	60	574	170
	65	215	650	90	M100×3	170	225	6-Φ33	65	596	200
	80	260	850	112	M125×4	195	260	6-Φ36	80	772	235
	100	290		130	M155×4	235	300	8-Φ39			

三千控制阀网 www.cv3000.com

J/L47Y-160/320型角式平衡截止、节流阀(angel type balance globe valve 、throttle valve)(DN65~150)

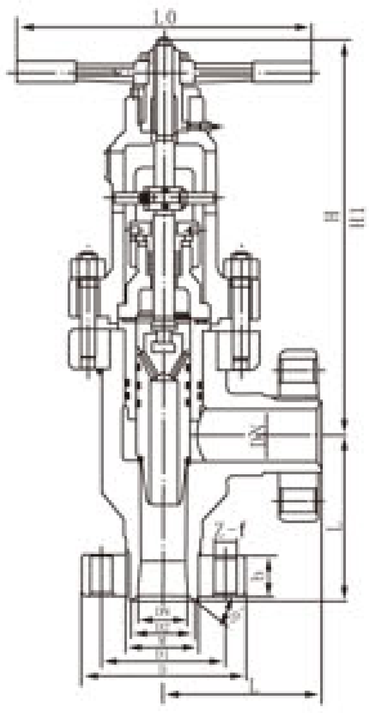

主要性能规范 Main property and specification

型 号 Model	公称压力 Nominal pressure (MPa)	试验压力(MPa)Test pressure		工作压力 Working pressure (MPa)	适用温度 Applicable temperature	适用介质 Applicable medium
		强度Strength	密封Seal			
J/L47Y-160	16	24	17.6	16	≤200℃	氮氢混合气、氨、液氨、铜铵液、碱液等 Nitrogen, hydrogenium, cuprammonia, alkali, etc.
J/L47Y-320	32	48	35.2	32	≤200℃	

主要零件材料 Materials for main parts

零件名称 Part name	材 料 Material	
阀体、法兰、环形垫圈 Body,flange、annular washer	优质碳素钢	High grade carbon steel
阀杆、阀瓣 Stem,disc	不锈钢	Stainless steel
阀杆螺母 Yoke nut	ZQA19-4 铸铝黄铜	Cast aluminium brass
填料 Packing	四氟乙烯	Tetrafluoroethylene
手柄 Handle	球墨铸铁	Nodular cast iron
"O"型密封圈 "O"sealing ring	氟26-41橡胶	FPM 26-41
密封面 Sealing surface	堆焊硬质合金	Bead welding hard alloy

主要连接及外形尺寸 Main connection and external dimensions(mm)

型 号 Model	公称通径 Nominal diameter	尺 寸 (mm) dimensions											
		L	D	D_1	M	D_2	D_N	b	Z-Φ	L0	H≈	H1≈	重量(Kg)weight
J/L47Y-160	65	215	200	145	M80×3	74	65	40	6-29	400	490	535	105
	80	260	225	170	M100×3	94	80	50	6-33	400	520	575	164
	100	290	260	195	M125×4	115	99	60	6-36	450	625	690	218
	125	320	300	235	M155×4	146	123	75	8-39	500	640	720	261
	150	350	330	255	M175×6	163	142	78	8-42	550	670	760	
J/L47Y-320	65	215	225	170	M100×3	90	68	50	6-33	400	490	535	127
	80	260	260	195	M125×4	112	85	60	6-36	400	520	575	190
	100	290	300	235	M155×4	130	103	75	8-39	450	625	690	265
	125	320	330	255	M175×6	155	120	78	8-42	500	640	720	290
	150	350	400	315	M215×6	193	149	90	8-48	550	670	760	

上海控制阀网 www.cv3000.com

J/L47Y W- 160、320 220R、320R型角式平衡截止、节流阀(angel type balance globe valve,throttle valve)(DN150~200)

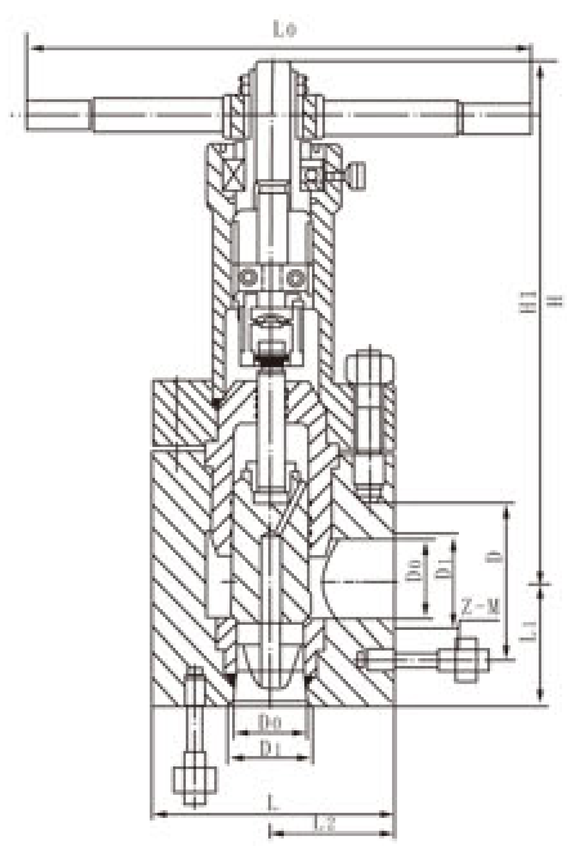

主要性能规范 Main property and specification

型 号 Model	公称压力 Nominal pressure (MPa)	试验压力(MPa)Test pressure		工作压力 Working pressure (MPa)	适用温度 Applicable temperature	适用介质 Applicable medium
		强度Strength	密封Seal			
J/L47Y-160C J/L47Y-320R	16 32	24 48	17.6 35.2	16 32	≤200℃	C:氨、氢、氨 Nitrogen,hydrogen,ammonia
J/L47W-220R J/L47W-320R	22 32	33 48	24.2 35.2	22 32	≤200℃	R:尿素甲胺液 R:Urea methylamine

主要零件材料 Materials for main parts

零 件 名 称 Part name	材 料 Material	
	J/L47Y-160、320C	J/L47W-220、320R
阀体 Body	A105、35	0Cr18Ni12Mo2Ti
阀座、阀瓣 Seat,disc	25、2Cr13(堆焊硬质合质)Bead welding hard alloy	25、2Cr13(堆焊硬质合质)Bead welding hard alloy
平衡套Balance sleeve	45	0Cr18Ni12Mo2Ti
"O"形圈 O ring	氟橡胶FPM	氟橡胶FPM
挡圈Retaining ring	F-4	F-4
下阀杆Lower stem	40Cr	0Cr18Ni12Mo2Ti
螺栓 Bolt	35CrMoA	35CrMoA
螺母 Nut	35	35
阀盖Bonnet	WCB(法兰Flange35)	WCB(法兰Flange35)
上阀杆 Upper stem	40Cr	40Cr
阀杆螺母 Yoke nut	ZQSN6-6-3	ZQSN6-6-3

主要连接及外形尺寸 Main connection and external dimensions(mm)

型号 Model	公称通径 Nominal diameter	Dimensions 尺 寸 (mm)										
		D_0	D_1	D	L	L_1	L_2	Z-M	L_0	H	H_1	重量(Kg)weight
J/L47Y W- 160 220R	150	136	163	255	400	205	190	8-M39×4		720	790	724
J/L47Y W- 320 320R	150	149	193	315	430	205	215	8-M56×4		865	940	776
	200	193	243	380	500	250	250	8-M56×4		1030	1110	924

结构形式 Structure

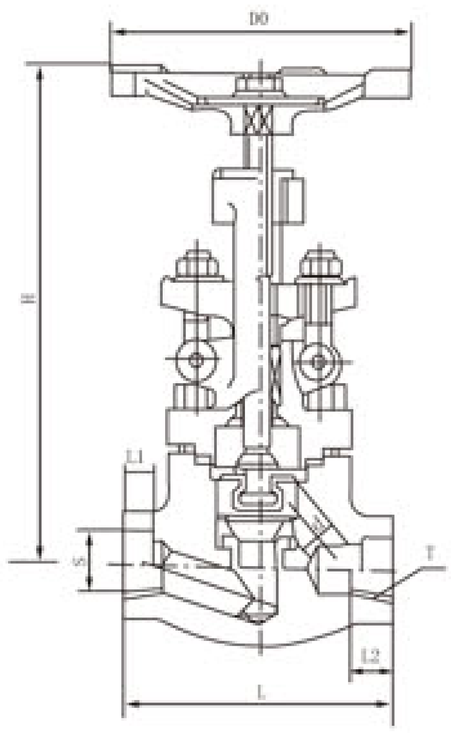

设计、制造标准 Standard for design and manufacture

1. 设计制造 Design and manufacture

按GB/T 12224－89. GB/T 12228－89.
According to GB/T 12224－89. GB/T 12228－89.

2. 连接端尺寸 Connecting end dimension

(1)承插孔尺寸按JB/T 1751－75 Socket dimension according to JB/T 1751－75

(2)螺纹端尺寸按GB/T 7306－87 Threaded end dimension according to GB/T 7306－87

3. 阀门检验和试验 Valve inspect and test:

按GB/T 13927－92 According to GB/T 13927－92

4. 材料 Material

(1)碳钢按GB/T 699的规定Carbon steel according to GB/T 699

(2)不锈钢按GB/T 1220的规定Stainless steel according to GB/T 1220

(3)耐热钢按GB/T 1221的规定
Heat-resisting steel according to GB/T 1221

主要零件材料 Materials for main parts

主要零件名称 Main part name	材 料 Material
阀体 阀盖 Body bonnet	碳 钢 Carbon steel
阀 座 Seat ring	不锈钢 Stainless steel
阀 瓣 Disc	不锈钢 Stainless steel
阀 杆 Stem	不锈钢 Stainless steel
垫 片 Shim	不锈钢+石墨 Stainless steel and graphite
填 料 Packing	柔性石墨 Flexibie graphite

主要性能规范 Main property and specification

试验项目 Test item \ PN	1.6	2.5	4.0	6.4	10.0	16.0
强度试验PS Strength test	2.4	3.75	6.0	9.6	15.0	24.0
密封试验P Seal test	1.76	2.75	4.4	7.04	11.0	17.6
气密封试验 Gas seal test	0.6					
使用温度 Applicable temperature	≤425℃					
适用介质 Applicable medium	水、油品、蒸汽 Water、oil、steam					

三千控制阀网 www.cv3000.com

主要连接及外形尺寸 Main connection and external dimensions(mm)

PN代号 Code	1.6,2.5,4.0MPa						6.4MPa						10.0MPa						16.0MPa					
DN	15	20	25	32	40	50	15	20	25	32	40	50	15	20	25	32	40	50	15	20	25	32	40	50
L	80	90	100	120	140	170	80	90	100	120	140	170	80	90	100	120	140	170	80	90	100	120	140	170
S	22.5	28.5	34.5	43	49	61	22.5	28.5	34.5	43	49	61	22.5	28.5	34.5	43	49	61	22.5	28.5	34.5	43	49	61
L_1	10	11	12	14	15	16	10	11	12	14	15	16	10	11	12	14	15	16	10	11	12	14	15	16
T	1/2	3/4	1	$1^1/_2$	$1^1/_2$	2	1/2	3/4	1	$1^1/_4$	$1^1/_2$	2	1/2	3/4	1	$1^1/_4$	$1^1/_2$	2	1/2	3/4	1	$1^1/_4$	$1^1/_2$	2
L_2	15	17	19	21	21	25	15	17	19	21	21	25	15	17	19	21	21	25	15	17	19	21	21	25
d	13	18	23	29	36	46	13	18	23	29	36	46	13	18	23	29	36	46	13	18	23	29	36	46
H	159	190	208	216	247	290	159	190	208	227	258	405	159	190	208	227	258	405	159	190	208	227	258	405
D0	98	112	126	166	188	220	98	112	126	166	188	220	98	112	126	166	188	220	98	112	126	166	188	220
重量(Kg) weight	3	4	5	7	12	18	3	4	5	8	14	20	3	4	5	8	14	20	3	4	5	8	14	20

说明： 1. H: 密封件材质合金钢。Y: 密封件材质堆焊硬质合金。
2. 其它填料和垫片材料均可提供，满足用户要求。

Instruction:
1. H: Material of the seal component is alloy steel; Y: Material of seal component is bead welding hard alloy.
2. Materials of other packing and shim may provide and satisfy customer demand.

J13W-$^{1.6}_{32}$P

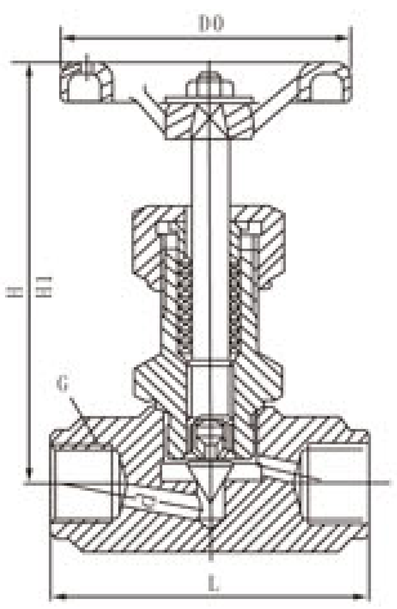

主要零件材料 Materials for main parts

零件名称 Part name	阀杆、阀盖 Stem, bonnet	阀杆、阀瓣 Stem, disc	填料 Packing
J13W-16P	铬镍不锈钢 Cr,Ni stainless steel	铬镍不锈钢 Cr,Ni stainless steel	聚四氟乙烯、柔性石墨 PTFE, soft graphite
J13W-160、J13W-40	优质碳钢 High grade carbon steel	铬不锈钢 Cr stainless steel	

主要性能规范 Main property and specification

型号 Model	公称压力 (MPa) Nominal pressure	试验压力PS(Mpa) Test pressure			工作压力 (Mpa) Working pressure	工作温度(℃) Working temperature	适用介质 Applicable medium
		壳体Shell	密封(液) Seal(liquid)	密封(气) Seal(gas)			
J13W-16	1.6	2.4	1.76	0.6	1.6	P≤540℃ C≥425℃	液化石油气水、酸、蒸汽、油品等 Liquified petroleum, acid, steam, oil goods and so on
J13W-40P	4.0	6.0	4.4	0.6	4.0		
J13W-160	16.0	24.0	17.6	0.6	16.0		
J13W-320P	32.0	48.0	35.2	0.6	32.0		

主要连接及外形尺寸 Main connection and external dimensions(mm)

公称直径DN(mm) Nominal diameter	管螺纹G Pipe thread G	尺 寸 Dimensions					重量(kg) Weight
		DO	L	H	H1	d	
6	1/4"	60	55	90	100	4	0.63
10	3/8"	60	60	92	102	5	0.65
15	1/2"	65	65	97	107	6	0.8
20	3/4"	80	80	109	121	8	1.07
25	1"	100	90	122	132	10	1.8
32	11/4"	140	128	180	191	15	5.0
40	11/2"	160	148	200	215	18	7.2

二千控制阀网
www.cv3000.com

J2$^{1}_{3}$W-$^{1.6}_{32}$P

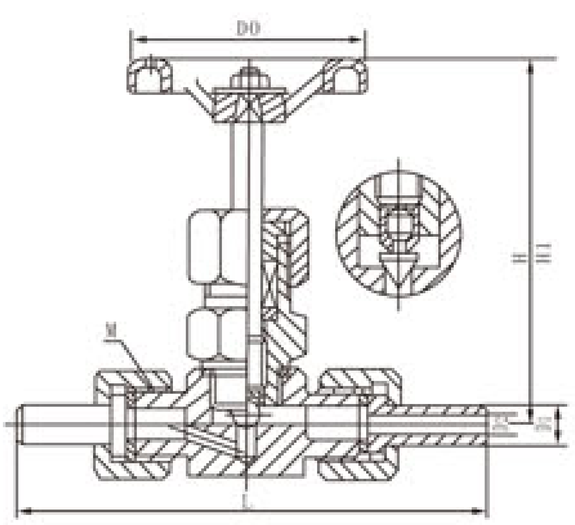

主要零件材料 Materials for main parts

零件名称 Part name	阀杆、阀盖 Stem,Bonnet	阀杆、阀瓣 Stem,Disc	填料 Packing
J2$^{1}_{3}$W-16P、J2$^{1}_{3}$W-25P	铬镍不锈钢 Cr,Ni stainless steel	铬镍不锈钢 Cr,Ni stainless steel	聚四氟乙烯、柔性石墨 PTFE, soft graphite
J2$^{1}_{3}$W-160、J2$^{1}_{3}$W-40	优质碳钢 High grade carbon steel	铬不锈钢 Cr stainless steel	

主要性能规范 Main property and specification

型号 Model	公称压力(MPa) Nominal pressure	试验压力PS(Mpa) Test pressure			工作压力(Mpa) Working pressure	工作温度(℃) Working temperature	适用介质 Applicable medium
		壳体 Shell	密封(液)Seal(liquid)	密封(气)Seal(gas)			
J2$^{1}_{3}$W-16	1.6	2.4	1.76	0.6	1.6	P≤540℃ C≥425℃	液化石油气水、酸、蒸汽、油品等 Liquified petroleum, acid, steam, oil goods and so on
J2$^{1}_{3}$W-40P	4.0	6.0	4.4	0.6	4.0		
J2$^{1}_{3}$W-160	16.0	24.0	17.6	0.6	16.0		
J2$^{1}_{3}$W-320P	32.0	48.0	35.2	0.6	32.0		

主要连接及外形尺寸 Main connection and external dimensions(mm)

公称直径DN(mm) Nominal diameter	尺 寸 Dimensions							重量(kg) Weight
	DO	D_1	D_2	L	H1	H2	M	
6	65	14	6	140	96	106	20×1.5	0.9
10	80	18	10	160	115	125	24×1.5	1.18
15	100	22	15	180	122	132	30×2	2.0
20	110	28	18	220	156	166	36×2	3.5
25	140	33	22	230	169	180	39×2	4.3

J24W-$\frac{16}{32}$P

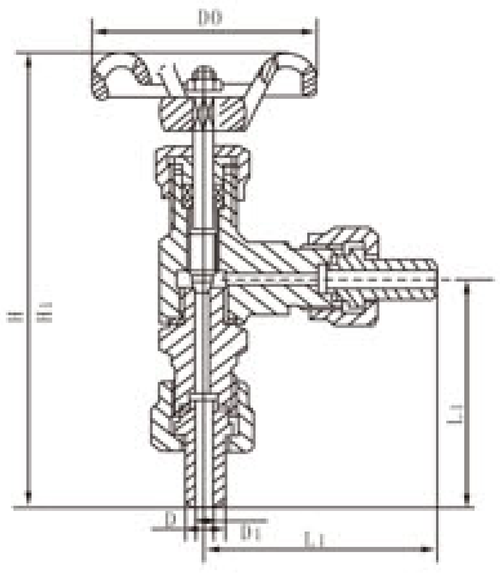

主要零件材料 Materials for main parts

零件名称 Part name	阀杆,阀盖 Stem, bonnet	阀杆,阀瓣 Stem, disc	填料 Packing
J24W-160PDN3	铬镍不锈钢 Cr,Ni stainless steel	铬镍不锈钢 Cr,Ni stainless steel	聚四氟乙烯、柔性石墨 PTFE, soft graphite
J24W-320P-DN6	优质碳钢 High grade carbon steel	铬镍不锈钢 Cr,Ni stainless steel	

主要性能规范 Materials property and specification

型号 Model	公称压力 (MPa) Nominal pressure	试验压力PS(MPa) Test pressure			工作压力 (Mpa) Working pressure	工作温度 (℃) Working temperature	适用介质 Applicable medium
		壳体Shell	密封(液) Seal(liquid)	密封(气) Seal(gas)			
J24W-160P-DN3	16.0	24.0	17.6	0.6	16.0	P≤540℃ C≤425℃	液化石油气 水、酸、蒸汽、油品等 Liquified petroleum, gas water,acid, steam, oil goods and so on
J24W-320P-DN6	32.0	48.0	35.2	0.6	32.0		

主要连接及外形尺寸 Main connection and external dimensions(mm)

型号 Model	公称直径DN(mm) Nominal diameter	尺 寸 Dimensions						重量(kg) Weight
		L_1	DO	H	H_1	D	D_1	
J24W-160P-DN3	3	80	65	159	168	14	3	1.0
J24W-320P-DN6	6	80	65	159	168	14	6	1.0

二十控制阀网
www.cv3000.com

J19H-$\frac{1.6}{32}$P

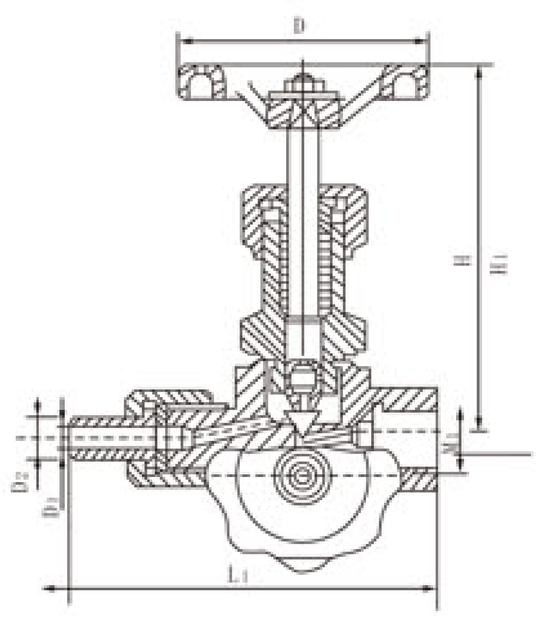

主要零件材料 Materials for main parts

零件名称 Part name	壳体 Body	阀杆 Stem	阀底座 Base	填料 Packing	填料 阀盖 Packing bonnet	手轮 Handwheel
J19H-320-DN6	碳钢 Carbon steel	铬不锈钢 Cr. stainless steel		聚四氟乙烯 柔性石墨 PTFE, soft graphite	碳钢 Carbon steel	优质碳钢 High grade carbon steel
J19W-320P-DN15	铬镍不锈钢 Cr.Ni stainless steel	铬不锈钢 Cr. stainless steel	铬钼不锈钢 Cr.Mo stainless steel		不锈钢 Stainless steel	

主要性能规范 Main property and specification

型号 Model	公称压力 (MPa) Nominal pressure	试验压力PS(MPa) Test pressure			工作压力 (Mpa) Working pressure	工作温度(℃) Working temperature	适用介质 Applicable medium
		壳体 Shell	密封(液) Seal(Liquid)	密封(气) Seal(gas)			
J19H-320	32.0	48.0	35.2	0.6	32.0	P≤540℃ C≤425℃	液化石油气 水、酸、蒸汽、油品等 Liquified petroleum, gas water,acid, steam, oil goods and so on
J19H-320P	32.0	48.0	35.2	0.6	32.0		

主要连接及外形尺寸 Main connection and external dimensions(mm)

型号 Model	公称直径DN(mm) Nominal diameter	尺 寸 Dimensions								重量(kg) Weight
		L_1	D0	D_2	D_1	H	H_1	M_1	Rc	
J19H-320	6	100	65	14	5	100	110	M20×1.5左(left)	–	1.2
J19W-320P	15	85	65	–	–	100	110	M20×1.5	G1/2"	1.0

节流截止放空阀
THROTTLE AND EMPTYING STOP

A型 Type A

B型 Type B

备注；用户在订货时请注明A型或B型。
Note: please specify type A or type B for ordering

主要特点 Characteristic

1、双质密封

阀芯与阀座硬质合金密封副及阀芯硬质合金与阀座上软密封副之间的软质密封副，形成了双质密封，保证了阀门的耐冲刷及零泄漏要求。

2、截止、节流功能分开

截止功能由阀芯和阀座的紧密封贴合实现，节流功能由阀芯套上的节流孔配合实现。大大提高了阀门的可靠性，避免了介质直接冲蚀密封副，延长了使用寿命。

3、启闭件结构平衡设计

阀芯上开有平衡孔，使上、下腔介质处于平衡状态，提高了阀门开启的稳定性和减少开启阻力。

4、预过滤长寿命设计

阀门密封副进口端加有过滤网装置，可将异物挡在密封副外，减少异物对密封副的磨损，延长密封面的使用寿命。

5、阀套式排污阀，阀芯的独特设计使介质由于方向的改变而产生涡流，从而使密封副不易粘附杂质,大大提高了阀门的可靠性和使用寿命。

1. Dual quality seal

Dual quality seal is composed of the hard alloy sealing pair upper soft sealing pair, and soft alloy sealing pair between hard a-lloy of valve core and valve base, ensuring erosion resistance and zero leakage of valve.

2. Separating function of isolating and throttling

Isolating function is fulfilled by tightly jointing of valve core and valve base, and throttling function by using throttle hole on the valve core housing so as to greatly improve the security of valve, prevent sealing pair from directly eroding by the medium, and prolong the durability.

3. Disc structure balance design

Balance hole on the valve core can keep the media balanced in both upper and lower chambers, improve the opening reliability of valve, and reduce the opening resistance.

4. Prefilter long durability design

The sealing pair entrance end of valve is fitted with filter screen, keeping foreign matters outside the sealing pair, reducing the abrasion to sealing pair, and prolonging the durability.

5. Valve cover type sewage valve. Applying unique design of valve core, the media will produce vortex flow in virtue to the change of direction, so that the sealing pair is not stuck by impurity, greatly improving the reliability and service life of valve.

概述 Summary

节流截止放空阀、阀套式排污阀系列预过滤双密封副节流截止放空阀是一种放空专用阀门，具有密封可靠，耐冲蚀，使用寿命长(使用寿命比一般节流、截止阀高数位)，标准化通用化程度高，抗硫性能优良，节能效果明显等优点。

该阀是石油、天然气、石化及冶金、电力系统放空部位对零泄漏及使用寿命要求高的场合的理想阀门。

Pre-filter double seal pair throttle & stop blowdown valve of the throttle & stop blowdown and sleeve type waste blowdown valve series is a special blowdown valve with characteristic of reliable sealing, erosion resistance, long service time (much more durable than other normal throttle and globe valves), high normalization and versatility, excellent sulfur resistance, and remarkable effect of energy saving.

It is an ideal valve as applied to the relief parts in the fields of petroleum, natural gas, petrochemical, metallurgy, and power supply systems which has high requirements on zero leakage and long service life.

设计制造标准 Standard for design and manufacture:

1、设计与制造按GB/T 12235-89、API6D

2、法兰连接尺寸按JB/T 79-94、ANSI B16.5

3、阀门压力试验按GB/T 13927-92

1、Design Manufacfure According to GB/T 12235-89 API6D

2、Flange Dimension According to JB/T 79-94 ANSI B16.5

3、Valve Check and Test According to GB/T 13927-92

三千控制阀网 www.cv3000.com

主要性能规范 Main property and specification

型号 Model / 零件材料 Part material / 零件名称 Part name	普通型 Normal type		抗硫型 Sulfur resisting type	
	GFJ41 H/Y	PWJ41 H/Y	KGFJ41 H/Y	KPWJ41 H/Y
阀体Body	WCB		WCB	
阀盖Bonnet	WCB		WCB	
阀瓣Disc	表面堆焊合金钢、硬质合金 Surfacing bead welding alloy steel, hard alloy		表面堆焊合金钢、硬质合金 Surfacing bead welding alloy steel, hard alloy	
阀杆Stem	不锈钢 Stainless steel		抗硫不锈钢 Sulfur stainless steel	
阀座Seat	表面堆焊合金钢 Surfacing bead welding alloy steel		表面堆焊合金钢 Surfacing bead welding alloy steel	
填料Packing	聚四氟乙烯 PTFE		聚四氟乙烯 PTFE	
适用介质 Applicable medium	石油、净化酸性天然气、煤气 Petroleum,purified acid gas,coal gas		含硫天然气(含H_2S体积分数≤8%) Sulfur containing gas (volume percentage of H_2S≤8%)	
适用温度 Applicable temperature	-29℃~121℃			
压力试验 Pressure test				
公称压力Nominal pressure(M Pa)	2.5	4.0	6.4	
密封试验 Seal test	公称压力×1.1倍 Nominal pressure x 1.1 times			
强度试验 Strength test	公称压力×1.5倍 Nominal pressure x 1.5 times			
气密封试验 Gas seal test	0.6MPa(空气Air)			

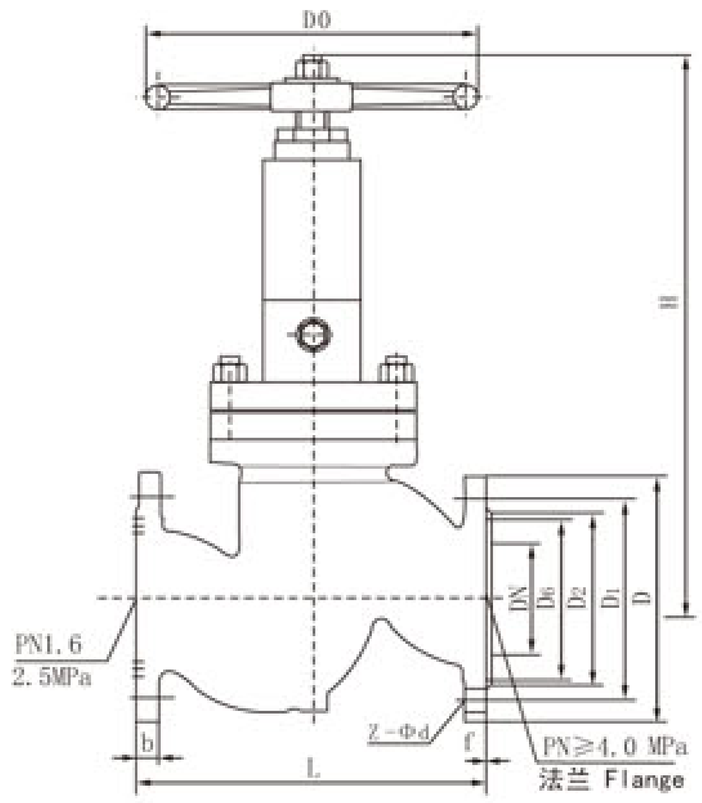

A型 Type A

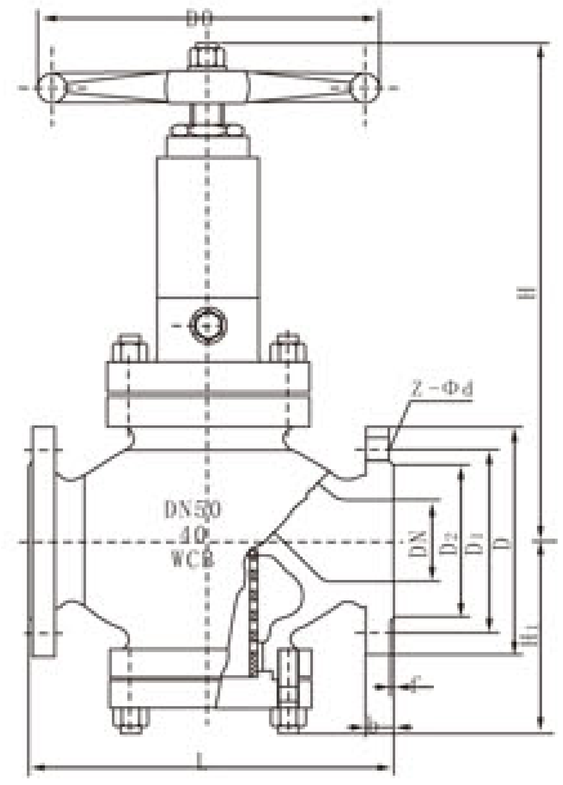

B型 Type B

主要连接及外形尺寸 Main connection and external dimensions(mm)

公称压力PN(MPa) Nominal pressure	公称通径DN(mm) Nominal Diameter	Dimensions 尺 寸 (mm)									重量(kg) Weight
		L	D	D1	D2	b	z-Φd	H	H1	DO	
GFJ41Y-16C PWJ41H/Y-16C KGFJ41H/Y-16C KPWJ41H/Y-16C	25	160	115	85	65	14	4-Φ14	243	86	180	18
	32	180	135	100	78	16	4-Φ18	255	95	180	19
	40	200	145	110	85	16	4-Φ18	265	108	250	25
	50	230	160	125	100	16	4-Φ18	346	115	250	28
	65	290	180	145	120	18	4-Φ18	365	131	270	32
	80	310	195	160	135	20	8-Φ18	409	146	300	53
	100	350	215	180	155	20	8-Φ18	484	163	300	62
	125	400	245	210	185	22	8-Φ18	510	182	380	73
	150	480	280	240	210	24	8-Φ23	521	202	350	128
	200	600	335	295	265	26	12-Φ23	594	292	350	168
	250	650	405	355	320	30	12-Φ25	621	355	400	289
GFJ41Y-25C PWJ41H/Y-25C KGFJ41H/Y-25C KPWJ41H/Y-25C	25	160	115	85	65	16	4-Φ14	243	86	180	18
	32	180	135	100	78	18	4-Φ18	225	95	180	19
	40	200	145	110	85	18	4-Φ18	265	108	250	25
	50	230	160	125	100	20	4-Φ18	346	115	250	28
	65	290	180	145	120	22	8-Φ18	352	129	270	33
	80	310	195	160	135	22	8-Φ18	409	146	300	57
	100	350	230	190	160	24	8-Φ23	433	163	300	69
	125	400	270	220	188	28	8-Φ25	480	180	320	81
	150	480	300	250	218	30	8-Φ25	521	202	350	145
	200	600	360	310	278	34	12-Φ25	594	292	350	188
	250	650	425	370	332	36	12-Φ30	621	355	400	315

公称压力PN(MPa) Nominal pressure	公称通径DN(mm) Nominal Diameter	Dimensions 尺 寸 (mm)										重量(kg) Weight
		L	D	D1	D2	D6	b	z-Φd	H	H1	DO	
GFJ41Y-40C PWJ41H/Y-40C KGFJ41H/Y-40C KPWJ41H/Y-40C	25	160	115	85	65	58	16	4-Φ14	243	86	180	21
	32	180	135	100	78	66	18	4-Φ18	250	95	180	23
	40	200	145	110	85	76	18	4-Φ18	265	108	250	31
	50	230	160	125	100	88	20	4-Φ18	346	115	250	35
	65	290	180	145	120	110	22	8-Φ18	280	125	270	47
	80	310	195	160	135	121	22	8-Φ18	409	146	300	70
	100	350	230	190	160	150	24	8-Φ23	433	163	300	85
	125	400	270	220	188	176	28	8-Φ25	480	180	320	84
	150	480	300	250	218	204	30	8-Φ25	521	202	350	172
	200	600	375	320	282	260	38	12-Φ30	594	292	350	219
	250	730	445	385	345	313	42	12-Φ34	621	355	400	378
GFJ41Y-64C PWJ41H/Y-64C KGFJ41H/Y-64C KPWJ41H/Y-64C	25	210	135	100	78	58	22	4-Φ18	244	86	180	25
	32	230	150	110	82	66	24	4-Φ23	270	92	200	32
	40	260	165	125	95	76	24	4-Φ23	250	108	250	37
	50	300	175	135	105	88	26	4-Φ23	254	115	300	42
	65	340	200	160	130	110	28	8-Φ23	305	126	320	51
	80	380	210	170	140	121	30	8-Φ23	346	146	350	84
	100	430	250	200	168	150	32	8-Φ25	409	163	350	100
	125	500	295	240	202	176	36	8-Φ30	460	190	370	110
	150	550	340	280	240	204	38	8-Φ34	521	202	400	208
	200	650	405	345	300	260	44	12-Φ34	641	292	500	265
	250	730	470	400	352	313	48	12-Φ41	705	355	500	452

三三控制阀门 www.cv300.com

上海明珠阀门制造有限公司
SHANGHAI MINGZHU VALVE MFG.CO.,LTD.

厂址：上海市奉贤区金汇镇工业大道1111号
ADD:No.1111 Industry Road Jinhui Town, Fengxian County. Shanghai, China
电话(TEL)：021-57482386　57483788
传真(FAX)：021-57482872
邮编(P.C)：201404
网络实名：上海明珠阀门
http://www.mingzhu-valve.com
E-mail:mzfm6688@163.com

工控制阀网
www.cv3000.com

中国进出口商品检验总公司质量认证中心　中石化物资资源市场成员　中石油一级供应网络成员　国家电力　合同信用等级认证　中国人民保险产品责任保险　中国阀门协会成员

以上产品资料仅供参考，如有参数改动本公司恕不另行通知并不承担法律责任。