MINGZHU VALVE 明珠阀门

上海明珠阀门制造有限公司
SHANGHAI MINGZHU VALVE MFG.CO.,LTD.

阀门样本 >>>
VALVE STYLEBOOK

※ 衬里阀系列
LINING VALVE SERIES

三千控制阀网
www.cv2000.com

衬氟截止阀
FLUORINE-LINING GLOBE VALVE

截止阀是指关闭件(阀瓣)由阀杆带动关沿阀座中心轴线做升降运动的阀门，在管路上主要用来接通或截断管路中的介质，但不能作节流用。

Globe valve refers to the valve in which the closing part (valve flap) driven by the valve stem and ascends or descends along the axial line of the valve seat. In the pipe line, it is mainly used for connecting or stopping the flow of the medium, but it cannot be used for throttling.

法兰连接截止阀 Flanged globe valve

1.设计与制造符合中国国家标准
Design and manufacture are in accordance with China's National Standard

2.基本结构形式：直通式，直流式 Basic structure form: through way type and Y-globe type

3.公称压力 Nominal pressure：PN1.0～1.6(MPa)

4.公称通径 Nominal diameter:DN15～350(mm)

5.基本型号(全衬里) Basic model(full liner)

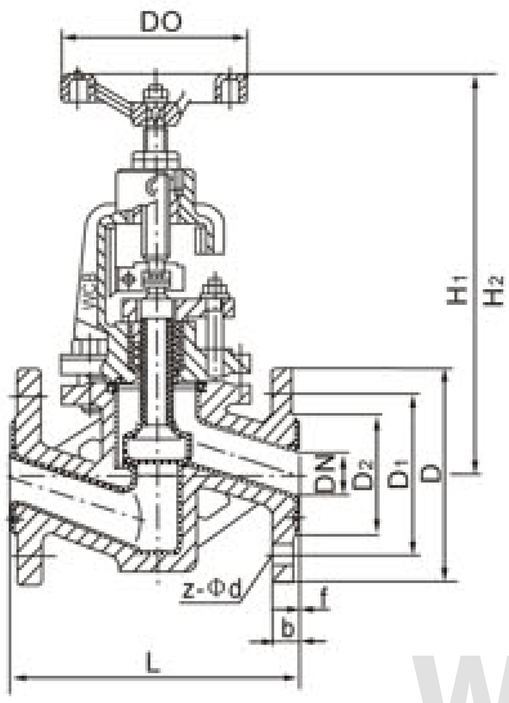

遵循规范		STANDARD	
设计与制造:	GB 12233/GB 12235	Design & manufacture:	GB 12233/GB 12235
结构长度:	GB 12221长一短系列	Face to face:	GB 12221(short-long series)
法兰尺寸:	JB 78/JB 79(GB、HG、SH)	Flange:	JB 78/JB 79 (GB、HG、SH)
压力试验:	GB/T13927	Pressure test:	GB/T13927
标志:	GB 12220	Symbol:	GB 12220
供货:	GB/T 12252	Supply:	GB/T 12252

序号 No.	零件名称 Part Name	灰铸铁Gray cast iron	铸钢Cast steel	不锈钢 Stainless steel	
		Z	C	P	R
1	阀体、阀盖 Body、bolted	HT250	WCB	CF8	CF8M
2	阀瓣、阀杆 Disc、stem	35	1Cr13	1Cr18Ni9Ti	1Cr18Ni12Mo2Ti
3	活节螺栓 Articulation bolt	35	35	1Cr17Ni12	1Cr17Ni12
4	衬里层/阀座Lining layer/ valve base	FEP(F46)	PCTFE(F3)	PFA(可溶性聚四氟乙烯)dissoluble PTFE	
5	填料 Packing	PTFE(F4)		PTFE(F4)	
6	填料压盖 Gland	WCB	WCB	CF8	CF8M
7	阀杆螺母 Yoke nut	ZQAL 9-4			
8	螺栓 Bolt	35	35	1Cr17Ni12	1Cr17Ni12
9	螺母 Nut	45	45	0Cr18Ni19	0Cr18Ni19
10	手轮 Handwheel	HT200	HT200	WCC	WCC

三禾控制阀网 www.cv3000.com

主要连接及外形尺寸 Main connection and external dimensions(mm)

公称通径 DN(mm) Nominal diameter	L	D	D_1	D_2	f	b	Z-Φd	D0	H	重量 weight(kg)
PN1.0 MPa										
15	130	95	65	45	2	14	4-Φ14	100	260	6.5
20	150	105	75	55	2	16	4-Φ14	100	265	7
25	160	115	85	65	2	16	4-Φ14	120	270	7.8
32	180	135	100	78	2	18	4-Φ18	140	285	11
40	200	145	110	85	3	18	4-Φ18	1140	315	13
50	230	160	125	100	3	20	4-Φ18	160	330	15
65	290	180	145	120	3	20	4-Φ18	180	395	23
80	310	195	160	135	3	22	4-Φ18	240	445	38
100	350	215	180	155	3	22	8-Φ18	240	490	42
125	400	245	210	185	3	24	8-Φ18	280	555	55
150	480	280	240	210	3	24	8-Φ23	320	645	77
200	495	335	295	265	3	26	8-Φ23	360	765	135
250	622	390	350	320	3	28	12-Φ23	400	805	220
300	698	440	400	368	4	28	12-Φ23	400	814	277
350	787	500	460	428	4	30	16-Φ23	450	855	320
PN1.6 MPa										
15	130	95	65	45	2	14	4-Φ14	100	265	7
20	150	105	75	55	2	16	4-Φ14	100	270	7.6
25	160	115	85	65	2	16	4-Φ14	120	275	8.2
32	180	135	100	78	2	18	4-Φ18	140	290	12
40	200	145	110	85	3	18	4-Φ18	140	320	14
50	230	160	125	100	3	20	4-Φ18	160	335	18
65	290	180	145	120	3	20	4-Φ18	180	400	26
80	310	195	160	135	3	22	8-Φ18	240	450	40
100	350	215	180	155	3	24	8-Φ18	240	495	50
125	400	245	210	185	3	26	8-Φ18	280	560	65
150	480	280	240	210	3	28	8-Φ23	320	650	85
200	600	335	295	265	3	30	12-Φ23	360	770	150
250	650	405	355	320	3	32	12-Φ25	400	810	245
300	750	460	410	375	4	34	12-Φ25	400	845	295

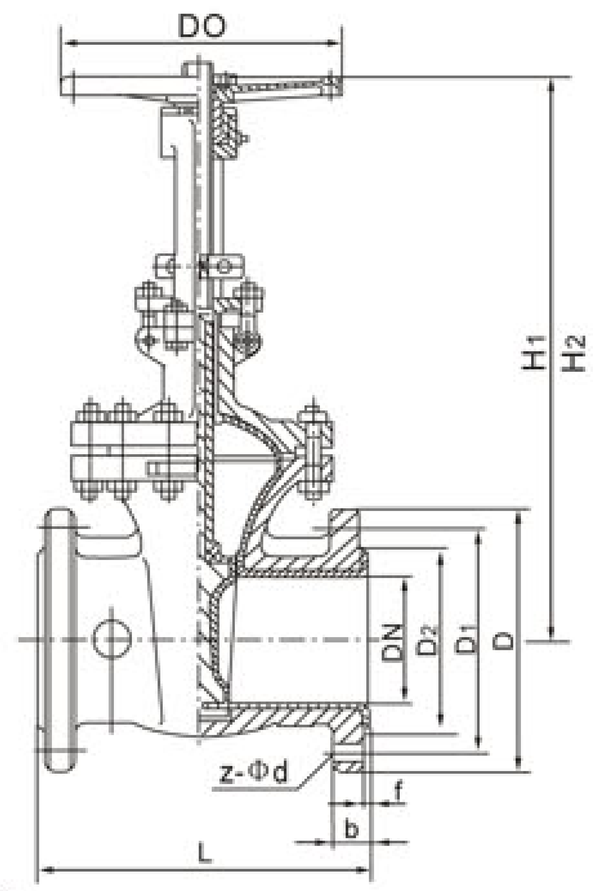

Z41$^{F3}_{F46}$型法兰连接手动楔式闸阀 (Flange manual wedge gate valve)

楔式闸阀是一种最常见的启闭阀门，利用两侧面密封面呈楔状的闸板来接通或截断管路中介质，楔式闸阀不允许微量开启在管路中作节流装置用，以免因高速流动的介质冲蚀面而加快密封面的损坏。

Wedge gate valve is one of the generally used open-and-close valves. It connects or cut off media in pipeline by the wedge plate at both sides of sealing surface. Wedge gate valve does not allow low lift to act as a throttling device in pipeline so as to avoid accelerating the breakage of sealing surface for the scour by high-speed flow medium.

三千控制阀网 www.cv3000.com

基本型号 Basic Model

Z41F3型，Z41F46型和Z40F3、Z40F46型。
Type Z41F3，type Z41F46 and Z40F3、type Z40F46.

设计规范 Design standard

遵循 GB/T 12234，API 600标准。

Design according to standard GB/T 12234 and AP1600.

驱动方式 Driving mode

手动、电动、正齿轮、伞轮传动。

Driving mode: Manual、electric、spur gear and bevel gear.

手动 Manual	Z41F3 Z40F3	气动 pneumatic actuated	Z441F3 Z440F46
	Z41F46 Z40F46		Z541F3 Z540F46
蜗轮传动 Worm-gear driving	Z641F3 Z640F3	电动 Electric actuated	Z941F3 Z9B41F3
	Z641F46 Z640F46		Z941F46 Z9B41F46

序号 No.	零件名称 Part name	灰铸铁 Gray cast-iron	铸钢 Cast steel	不锈钢 Stainless steel	
		Z	C	P	R
1	阀体、阀盖、阀板 Valve body,valve cover, valve plate	HT250	WCB	CF8	CF8M
2	衬里层/阀座 Lining layer/valve base				
3	阀杆 Valve stem	1Cr13	2Cr13	1Cr18Ni9	1Cr18Ni9
4	填料、垫片 Filing、Washer	PTFE(F4)			
5	中法兰螺栓 Middle flange bolt	35	35	1Cr17Ni2	1Cr17Ni2
6	中法兰螺母 Middle flange nut	45	45	0Cr18Ni9	0Cr18Ni9
7	支架 Bracket	WCB		CF8	
8	阀杆螺母 Yoke nut	ZQAL 9-4		A439D2	
9	手轮 Handwheel	HT200			

主要连接及外形尺寸 Main connection and external dimensions(mm)

公称通径 Nominal diameter DN(mm)	标准值 Standard value							参考值 Consult value			
	L	D	D_1	D_2	f	b	Z-Φd	D0	H_1	H_2	重量 Weight(kg)
	PN1.0(MPa)										
15	130	95	65	45	2	14	4-Φ14	100	110	125	6
20	150	105	75	55	2	16	4-Φ14	100	120	140	7
25	160	115	85	65	2	16	4-Φ14	120	132	155	8
32	180	135	100	78	2	18	4-Φ18	120	156	185	11
40	240	145	110	85	3	18	4-Φ18	160	167	210	20
50	250	160	125	100	3	20	4-Φ18	160	358	410	28
65	270	180	145	120	3	20	4-Φ18	180	375	440	32
80	280	195	160	135	3	22	4-Φ18	180	435	515	45
100	300	215	180	155	3	22	8-Φ18	220	500	600	60
125	325	245	210	185	3	24	8-Φ18	220	615	740	110
150	350	280	240	210	3	24	8-Φ23	240	675	825	120
200	400	335	295	265	3	26	8-Φ23	280	820	1020	150
250	450	390	350	320	3	28	12-Φ23	320	970	1220	240
300	500	440	400	368	4	28	12-Φ23	320	1145	1445	340
350	550	500	460	428	4	30	16-Φ23	360	1280	1630	550
400	600	565	515	482	4	32	16-Φ25	400	1450	1850	680
450	650	615	565	532	4	32	20-Φ25	500	1538	1988	795
500	700	670	620	585	4	34	20-Φ25	500	1730	2230	880

三千控制阀网 www.cv3000.com

主要连接尺寸及重量 Main dimensions and weight

公称通径 Nominal diameter DN(mm)	标准值 Standard value							参考值 Consult value			
	L	D	D_1	D_2	f	b	Z-Φd	D0	H_1	H_2	重量 Weight(kg)
	PN1.6(MPa)										
15	130	95	65	45	2	14	4-Φ14	120	110	130	7
20	150	105	75	55	2	14	4-Φ14	120	120	140	8
25	160	115	85	65	2	14	4-Φ14	120	135	160	9
32	180	135	100	78	2	16	4-Φ18	160	160	190	13
40	240	145	110	85	3	16	4-Φ18	160	170	220	25
50	250	160	125	100	3	16	4-Φ18	160	360	410	32
65	270	180	145	120	3	18	4-Φ18	180	380	440	38
80	280	195	160	135	3	20	8-Φ18	181	440	520	50
100	300	215	180	155	3	20	8-Φ18	240	500	600	68
125	325	245	210	185	3	22	8-Φ18	240	615	740	125
150	350	280	240	210	3	24	8-Φ23	280	680	830	170
200	400	335	295	265	3	26	12-Φ23	280	820	1020	210
250	450	405	355	320	3	30	12-Φ25	320	980	1230	260
300	500	460	410	375	4	30	12-Φ25	320	1150	1450	480
350	550	520	470	435	4	34	16-Φ25	400	1285	1635	620
400	600	580	525	485	4	36	16-Φ30	400	1455	1855	805
450	650	640	585	545	4	40	20-Φ30	500	1545	1990	880
500	700	705	650	608	4	44	20-Φ34	500	1735	2235	920

Q41F3、Q641F3
Q41F46、Q641F46 -PN10、16

衬氟球阀
FLUORINE-LINING BALL VALVE

球阀和旋塞阀属同一类阀门，不同的是球阀是用带圆形通孔的球体作启闭件，球体随阀杆绕阀体中心线旋转以实现阀门开启和关闭的目的。
Ball valve and plug valve are the same type valves, the difference between them is that ball valve uses the with round blowhole as the open and close component, the globe body rotates around the valve's center line with valve stem so as to make the valve open and close.

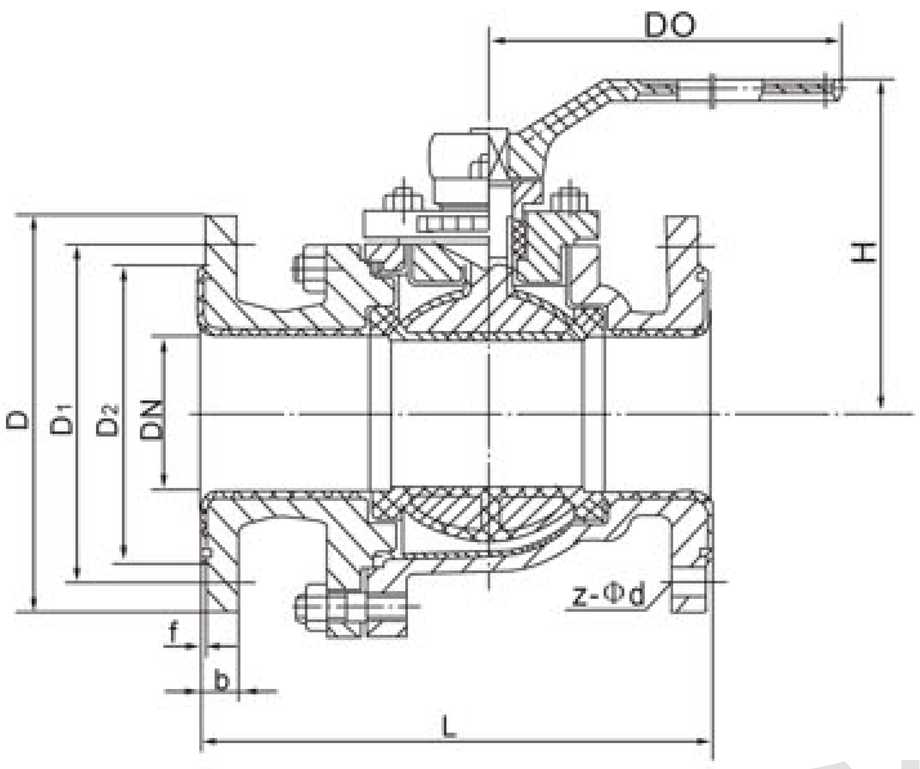

Q41$^{F3}_{F46}$型法兰连接手动球阀(直通二片式)
Q41$^{F3}_{F46}$Type flange manual ball valve(through way two-piece type)

产品概述 Product summary

球阀基本系列为Q41F46型，可分为对分(二片)式和三片式两种结构型式,除具有一般球阀所具有的流体阻力小，启闭速度快，结构简单外，还有以下特点：

1、采用FEP衬里层的球阀，具有极高的化学稳定性，可以适用除“熔融碱金属和元素氟”,以外其它任何强腐蚀介质。

2、采用全通径、浮动球结构,阀门可在整个压力范围内进行无泄漏关闭,更便于管路系统的通球扫线和管路维护。

3、启闭件球体与阀杆铸(锻)为一体,杜绝了由于压力变化引起阀杆冲出承压件内的可能性,从根本上保证了工程中的使用安全性。

4、结构紧凑合理，阀体内腔空间最小，减小了介质滞留，另外，特殊的模压工艺，使密封面致密度良好,加之人字环形PTFE填料组合，使阀门达到零泄漏。

QL41F46 type, the basic series of ball valve, can be divided into two structure types: bisection type (two-piece) and three-piece type. Besides general advantages like small fluid resistance, rapid switching speed and simple structure, it also owns following features:

1.The ball valve which adopts FEP lining layer has extremely high chemical stability. It is applicable for any strong corrosive media other than fused alkali metal and the element fluorine.

2.For no leakage close within whole pressure scope by adopting the structure of full bore and floating ball, the valve is especially applicable for through ball and scavenger in pipeline system as well as its maintenance.

3.Monoblock of open-and-close sphere and valve stem stops the possibility that valve stem will fly out of the pressing component for the changes of pressure. So it fundamentally ensures the using security during work.

4.Compact and reasonable structure and minimized cavity within valve body reduce the remaining of medium. In addition, special stem pressing technics ensures the density of sealing surface and enables the valve to reaches zero leakage by adding herring PTFE filling assembly.

三千控制阀网
www.cv3000.com

遵循规范 Standard	
设计与制造Manufacture and design	GB/T 12237
结构长度 Face to face	GB/T 12221
法兰尺寸 End flange	JB78/JB79 (GB，HG，SH)
压力试验 Pressure test	GB/T 13927
标志 Symbol	GB/T 12220
供货 Supply	GB/T12252

手动 Manual	Q41F3 full lining(全衬里)	气动 pneumatic actuated	QL641F3 full lining(全衬里)
	Q41F46 full lining(全衬里)		QL641F46 full lining(全衬里)
蜗轮传动 Worm-gear driving	Q341F3 full lining(全衬里)	电动 electric actuated	QL941F3 full lining(全衬里)
	Q341F46 full lining(全衬里)		QL941F46 full lining(全衬里)

序号 No.	零件名称 Part name	灰铸铁 Gray cast-iron	铸钢 Cast steel	不锈钢 Stainless steel	
		Z	C	P	R
1	阀体、阀盖 Valve body, valve cover	HT250	WCB	CF8	CF8M
2	球 Ball	WCB	WCB	CF8	CF8M
3	衬里层/阀座 Lining layer/valve base	FEP(F46) PCTFE(F3) PFA (可熔性聚四氟乙烯) dissoluble PTFE			
4	填料压盖 Gland	HT250	WCB	CF8	CF8M
5	填料 Packing	PTFE(F4) 聚四氟乙烯 Polytetrafluoroethylene			
6	螺栓 Bolt	35	35	1Cr17Ni2	1Cr17Ni2
7	螺母 Nut	45	45	0Cr18Ni9	0Cr18Ni9
8	手柄 Handle	WCC	WCC	WCC	WCC

主要连接及外形尺寸 Main connection and external dimensions(mm)

公称通径 Nominal Diameter (mm)	标准值 Standard value							参考值 Consult value		
	L	D	D_1	D_2	f	b	Z-Φd	D0	H	重量 Weight(kg)
	PN1.0(MPa)									
15	140/130	95	65	45	2	14	4-Φ14	120	80	2.5
20	140/130	105	75	55	2	16	4-Φ14	140	90	3
25	150/140	115	85	65	2	16	4-Φ14	160	100	4.5
32	165	135	100	78	2	18	4-Φ18	160	110	5.7
40	180/165	145	110	85	3	18	4-Φ18	200	120	7
50	200/203	160	125	100	3	20	4-Φ18	250	135	9.5
65	220/222	180	145	120	3	20	4-Φ18	300	145	15
80	250/241	195	160	135	3	22	4-Φ18	350	185	19
100	280/305	215	180	155	3	22	8-Φ18	400	195	33
125	320/356	245	210	185	3	24	8-Φ18	500	210	58
150	360/394	280	240	210	3	24	8-Φ23	200*	450	93
200	457	335	295	265	3	26	8-Φ23	240*	490	155
250	533	390	350	320	3	28	12-Φ23	240*	550	210

三千控制阀网 www.cv3000.com

主要连接及外形尺寸 Main connection and external dimensions(mm)

公称通径 Nominal Diameter (mm)	标准值 Standard value					参考值 Consult value				
	L	D	D_1	D_2	f	b	Z-Φd	D0	H	重量 Weight(kg)
	PN1.6(MPa)									
15	140/130	95	65	45	2	14	4-Φ14	120	80	2.5
20	140/130	105	75	55	2	16	4-Φ14	140	90	3
25	150/140	115	85	65	2	16	4-Φ14	160	100	4.5
32	165	135	100	78	2	18	4-Φ18	160	110	5.7
40	180/165	145	110	85	3	18	4-Φ18	200	120	7
50	200/203	160	125	100	3	20	4-Φ18	250	135	9.5
65	220/222	180	145	120	3	20	4-Φ18	300	145	15
80	250/241	195	160	135	3	22	8-Φ18	350	185	19
100	280/305	215	180	155	3	24	8-Φ18	400	195	33
125	320/356	245	210	185	3	26	8-Φ18	500	210	58
150	360/394	280	240	210	3	28	8-Φ23	200*	450	93
200	457	335	295	265	3	30	12-Φ23	240*	490	155

*表中L值按GB/T 12221，其中分子表示按JB/T 1686或企业标准，法兰尺寸按JB/T 78。
"L" in the form is in accordance with GB/T12221, and the numerator of it is according to JB/T1686 or the enterprise standard. Flange dimension is in accordance with JB/T78.

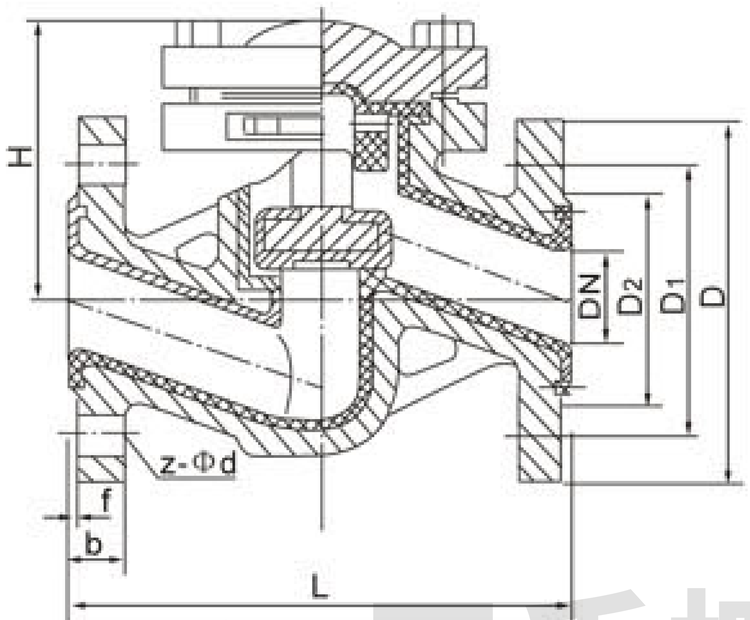

H41 F3/F46 型止回阀（升降式）
check valve(lift type)

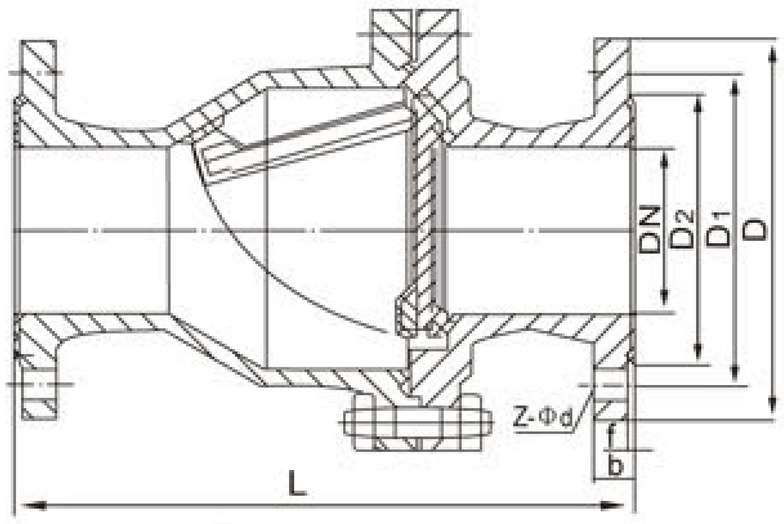

H44 F3/F46 型止回阀（旋启式）
check valve(swing type)

三千控制阀网 www.cv3000.com

止回阀是一种依靠介质本身的流动而自动启、闭阀瓣用来阻止介质逆向流动的自动阀门。
Check valve is one kind of auto-valve that can automatically open and close disc to prevent medium from reverse flow depending on the fluxion of medium itself.

法兰连接止回阀 Flanged check valve

设计与制造符合国家标准

Design and manufacture are in accordance with national standard

基本结构形式：旋启式，直通升降式

Basic structure type: swing type and through way lift

公称压力 Nominal pressure：PN1.0~1.6(MPa)

公称通径 Nominal diameter：DN15~500(mm)

基本型号 Basic model：H41F3、H41F46、H44F3、H44F46

遵循规范 Standard		
设计与制造	Design&manufacture	GB/T 12235、GB/T12236
结构长度	Face to face	GB/T 12221、JB/T 96
法兰尺寸	End flange	JB/T 78、JB/T 79
压力试验	Pressure Test	GB/T 13927
标志	Symbol	GB/T 12220
供货	Supply	GB/T 12252

序号 No.	零件名称 Part name	灰铸铁 Gray cast-iron	铸钢 Cast steel	不锈钢 Stainless steel	
		Z	C	P	R
1	阀体、阀盖 Valve body, bolted bonnet	HT250	WCB	CF8	CF8M
2	衬里层/阀座 Lining layer/valve base	FEP(F46) PCTFE(F3) PFA (可熔性聚四氟乙烯) dissoluble PTFE			
3	轴、阀瓣(板) spindle, disc	1Cr13/35 WCB 1Cr18Ni19 00Cr17Ni14Mo2			
4	螺栓 Bolt	35	35	1Cr17Ni2	1Cr17Ni2
5	螺母 Nut	45	45	0Cr18Ni9	0Cr18Ni9

主要连接及外形尺寸 Main connection and external dimensions(mm)

公称通径 Nominal Diameter (mm)	标 准 值 Standard value							参 考 值 Consult value		
	L	D	D_1	D_2	f	b	Z-Φd	D0	H	重量 Weight(kg)
	PN1.0(MPa)									
15	130	95	65	45	2	14	4-Φ14	105	55	5
20	150	105	75	55	2	16	4-Φ14	115	58	7
25	160	115	85	65	2	16	4-Φ14	128	60	9
32	180	135	100	78	2	18	4-Φ18	145	75	11
40	200	145	110	85	3	18	4-Φ18	160	82	13.5
50	230	160	125	100	3	20	4-Φ18	178	95	18
65	290	180	145	120	3	20	4-Φ18	205	105	22
80	310	195	160	135	3	22	4-Φ18	230	120	28
100	350	215	180	155	3	22	8-Φ18	255	135	34
125	400	245	210	185	3	24	8-Φ18	305	158	58
150	480	280	240	210	3	24	8-Φ23	345	180	72
200	495	335	295	265	3	26	8-Φ23	415	215	150
250	622	390	350	320	3	28	12-Φ23	490	240	165
300	698	440	400	368	4	28	12-Φ23	540	265	190
350	787	500	460	428	4	30	16-Φ23	585	300	225
400	914	565	515	482	4	32	16-Φ25	635	360	254
450	978	615	565	532	4	32	20-Φ25	680	385	285
500	978	670	620	585	4	34	20-Φ25	740	415	333

三千控制阀网
www.cv3000.com

主要连接及外形尺寸 Main connection and external dimensions(mm)

公称通径 Nominal Diameter (mm)	标 准 值 Standard value						参 考 值 Consult value			
	L	D	D_1	D_2	f	b	Z-Φd	D0	H	重量 Weight(kg)
	PN1.6(MPa)									
15	130	95	65	45	2	14	4-Φ14	110	55	6
20	150	105	75	55	2	16	4-Φ14	120	58	7.8
25	160	115	85	65	2	16	4-Φ14	135	60	10
32	180	135	100	78	2	18	4-Φ18	150	75	12.5
40	200	145	110	85	3	18	4-Φ18	165	82	14.5
50	230	160	125	100	3	20	4-Φ18	185	95	19.5
65	290	180	145	120	3	20	4-Φ18	210	105	25.5
80	310	195	160	135	3	22	8-Φ18	235	120	30
100	350	215	180	155	3	24	8-Φ18	260	135	36
125	400	245	210	185	3	26	8-Φ18	310	158	62
150	480	280	240	210	3	28	8-Φ23	350	180	78
200	495	335	295	265	3	30	12-Φ23	420	215	156
250	622	405	355	320	3	32	12-Φ25	505	240	172
300	698	460	410	375	4	34	12-Φ25	560	265	240
350	787	520	470	435	4	38	16-Φ25	605	300	208
400	914	580	525	485	4	40	16-Φ30	650	350	265

D71 F3/F46 -PN10、16

衬氟蝶阀
FLUORINE-LINING BUTTERFLY VALVE

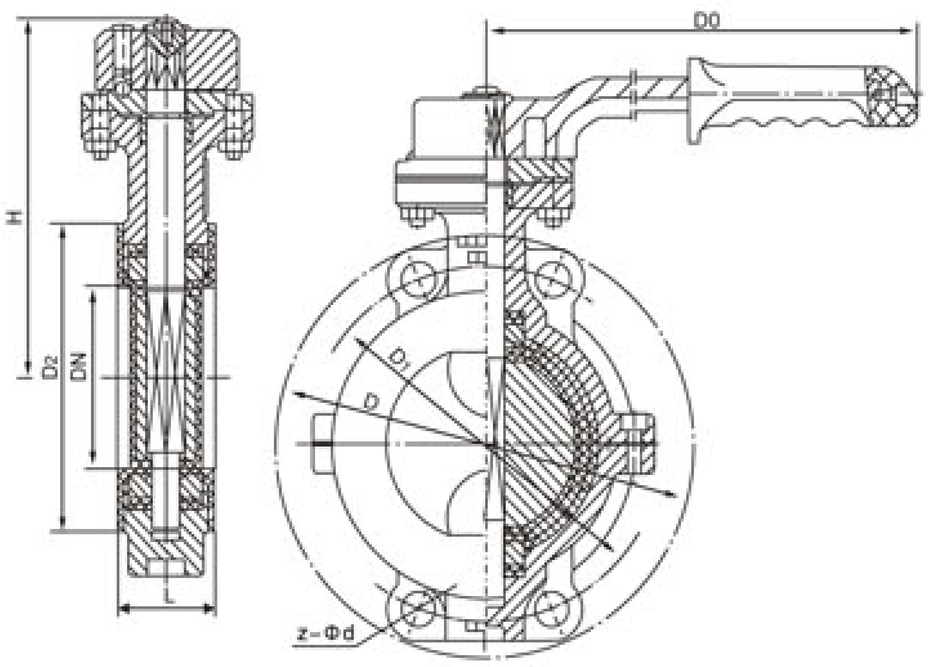

蝶阀是蝶板随阀杆一起转动，用以实现阀门的开启，关闭与调节的阀门。

蝶阀在管路中除了起切断和截流作用外,近年来已经把密封性能作为评价的主要指标,受到市场青睐。另外，蝶阀还有体积小、重量轻、结构简单等优点,与同参数闸阀比较,平均减轻重量达30~50%，蝶板旋转90° 即可实现启、闭过程,阀内转轴两侧蝶板受介质作用力近似相等,转矩相反，因此启闭力矩较小。

Butterfly valve is the one use disc rotating along with valve s-tem to realize valve open, close and adjustment.

Besides cut-off and stop-flow functions, the sealing function has been taken as a main evaluating index in recent years and favored in the market. In addition, it also has many advantages, such as small volume, lightweight, simple structure, etc. Compared with gate valve with the same parameters, it is 30-50% lighter. The process of open and close can be realized only by turning butterfly plate by 90°. Because the action made by media to butterfly plates on the both sides of revolution axis is approximately equal and torque is opposite, the open and lose moment is comparatively short.

结构特点 Configuration characteristic

1.中线蝶阀为整个蝶板与阀座在360° 圆周内同心（中线），具有双向密封功能，压力、流量要自由调节。
2.偏心蝶阀为二维方向偏心产生的凸轮效应会使密封副产生足够的密封比压，关且随着工作压力的升高，密 封效果更理想。
3.四级加载弹性密封，绝对保证了阀门内、外的零泄漏。
a.轴头、蝶反园周连接外的特过渡曲线与阀座的合理过盈
b.轴头端面采用弹性O型圈和轴肩处刚垫圈、弹性橡胶垫组合
c.轴的径向采用O型圈与金属垫的组合
d.阀座镶在有弹性条的阀体槽内
4.采用可调弹性弹子定位，定位准确，结构简单。(*采用O型圈是为了防止意外泄漏时的安全措施)
5.法兰连接双偏心蝶阀适用于压力较高的场合。

1. Central-line butterfly valve is the concentric (central line) of whole butterfly plate and valve base in 360° circle, with double-direction sealing function and freely adjustable pressure and flux.
2. For the cam effect produced by 2-dimensional centricity, eccentric butterfly valve makes the sealing pair produce enough sealing pressure. The sealing result will be better following the rising of operating pressure.
3. Grade 4 loading elastic sealing will absolutely guarantee zero leakage inside and outside of valve body.
a. Reasonable interference by valve base and special transition curve, which is outside periphery connection of gudgeon and butterfly plate.
b. Adopt elastic O-ring, shaft shoulder rigid washer and elastic rubber pad combination for gudgeon's end face.
c. The combination of O-ring and metal pad for axis's radial.
d. Valve base is beset in elastic groove of valve body.
4. Adopt adjustable elastic marble for position, which is precise with simple structure. (It is a safety measure to adopt O-ring to avoid accidental leakage)
5. Flanged double eccentric butterfly valve is suitable for the occasions with high pressure.

设计规范 Design Criterion

遵循 GB/T 12238，API 609， MSS SP-67，MSS SP-68标准。

驱动方式 Auording to standard of

手动、蜗轮传动、气动、电动。
Drive mode: Manual,worm-wheel,pneumatic,electric

三千控制阀网 www.cv3000.com

遵循规范 Standard	
设计与制造 Design and manufacture	API 609
结构长度 Face to face	API 609(A类)type A (中线central-line)
法兰尺寸 End flange	ANSIB 16.5 API 605
压力试验 Pressure test	API 598
标志 Symbol	MSS SP-25
供货 Supply	API 609

主要零部件材料表 Standard material specifications for main parts

序号 No.	零件名称 Part name	灰铸铁Gray cast-iron	铸 钢 Cast steel	不锈钢Stainless steel	
		Z	C	P	R
1	上、下阀体、阀盖 Up、down valve body、valve cover	A126C 135A	A126 WCB	A351 CF8	A351 CF8M
2	蝶板Disc	A216 WCB	A105	A351 CF8	A351 CF8M
3	蝶板轴Disc axes	A182 F6	A182 F6	A182 F316	A182 F316
4	衬里层/阀座Lining layer/valve base	PTFE(F4) PTFE(F4)	PCTFE(F3) FEP(F46)	PFA(可溶性聚四氟乙烯) dissoluble PTFE	
5	O型圈 O-ring	VITon (氟橡胶) FPM			
6	弹性条(垫)Elasticity mat	SI (硅橡胶) Silicon rubber			
7	调节定位座Adjust orientation seat	A182 F304	A182 F304	A182 F304	A182 F316
8	蝶栓 Bolt	A193 B7	A193 B7	A193 B8M	A193 B8M
9	螺母Nut	A194 2H	A194 2H	A194 8	A194 8
10	手柄 Handle				

主要连接及外形尺寸 Main connection and external dimensions(mm)

公称通径 Nominal Diameter (mm)	标准值 Standard value							参考值 Consult value		
	L	D	D_1	D_2	f	b	z-Φd	D_5	H	重量 Weight(kg)
	PN1.0(MPa)									
40	33	145	110	85	3	18	4-Φ18	160	140	3
50	43	160	125	100	3	20	4-Φ18	200	145	4
65	46	180	145	120	3	20	4-Φ18	250	155	6
80	46	195	160	135	3	22	4-Φ18	250	165	8
100	52	215	180	155	3	22	8-Φ18	300	180	12
125	56	245	210	185	3	24	8-Φ18	300	203	18
150	56	280	240	210	3	24	8-Φ23	200*	225	28
200	60	335	295	265	3	26	8-Φ23	200*	275	56
250	68	390	350	320	3	28	12-Φ23	240*	315	72
300	78	440	400	368	4	28	12-Φ23	240*	348	88
350	78	500	460	428	4	30	16-Φ23	240*	415	170
400	102	565	515	482	4	32	16-Φ25	280*	460	145
450	114	615	565	532	4	2	20-Φ25	280*	500	165
500	127	670	620	585	4	34	20-Φ25	320*	530	195
600	154	780	725	685	5	36	20-Φ30	320*	610	268
700	165	895	840	800	5	40	24-Φ30	360*	675	320
800	190	1010	950	905	5	44	24-Φ34	360*	805	395
900	203	1110	1050	1005	5	46	28-Φ34	380*	995	450
1000	216	1220	1160	1115	5	50	28-Φ34	400*	1170	680
1200	254	1450	1380	1325	5	56	32-Φ41	400*	1295	825

三丰控制阀网 www.cv3000.com

主要连接及外形尺寸 Main connection and external dimensions(mm)

公称通径 Nominal Diameter (mm)	标准值 Standard value							参考值 Consult value		
	L	D	D_1	D_2	f	b	z-Φd	D0	H	重量 Weight(kg)
	PN1.6(MPa)									
40	33	145	110	85	3	18	4-Φ18	200	145	4
50	43	160	125	100	3	20	4-Φ18	200	150	5
65	46	180	145	120	3	20	4-Φ18	250	160	7
80	46	195	160	135	3	22	8-Φ18	250	170	10
100	52	215	180	155	3	24	8-Φ18	300	185	14
125	56	245	210	185	3	26	8-Φ18	300	210	22
150	56	280	240	210	3	28	8-Φ23	200*	230	32
200	60	335	295	265	3	30	12-Φ23	240*	285	66
250	68	405	355	320	3	32	12-Φ25	240*	325	80
300	78	460	410	375	4	34	12-Φ25	280*	360	94
350	78	520	470	435	4	38	16-Φ25	280*	430	125
400	102	580	525	485	4	40	16-Φ30	320*	475	150
450	114	640	585	545	4	44	20-Φ30	320*	525	172
500	127	705	650	608	4	46	20-Φ34	320*	565	225
600	154	840	770	718	5	54	20-Φ41	360*	620	290
700	165	910	840	788	5	54	24-Φ41	360*	686	330
800	190	1020	950	898	5	54	24-Φ41	380*	815	425
900	203	1120	1050	998	5	54	28-Φ41	400*	1010	495
1000	216	1255	1170	1110	5	60	28-Φ48	400*	1185	710

* 为了方便客户安装要求，本表给定的数值系与蝶阀连接的标准法兰尺寸，简图中尺寸代号仅是其中一部分。

For convenience of the users's installment, this Form offers the standard flange dimension of butterfly connection. Dimension codes in the simple diagram is only one part of it.

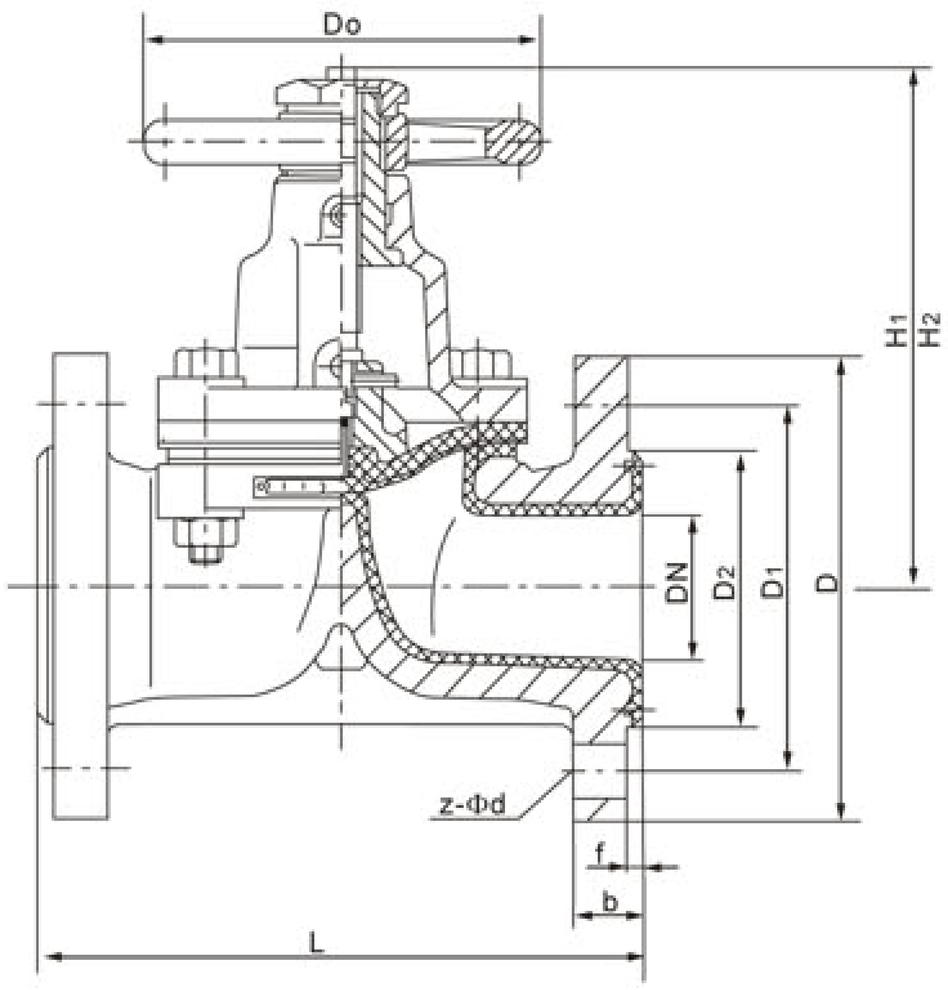

G41 $^{F3}_{F4}$ 型手动隔膜阀

G41 $^{F3}_{F4}$ Type manual diaphragm valve

隔膜阀是一种特殊形式的具有截断功能的阀，其启闭件由钢质阀瓣与软质材料）制成的隔膜组成，并将阀体内腔与阀盖内腔隔开以达到截断管内质之目的。

Diaphragm valve is a special valve with cut off function, its open and close component is composed of steel disc and diaphragm in soft material. It can separate valve body's cavity from valve cover cavity to cut off the material pipeline.

设计规范 Design criterion

遵循 GB/T 12238，API 609， MSS SP-67，MSS SP-68标准
结构长度 GB/T 12221、JB/T 1688
法兰尺寸 JB/T 78、JB/T 79
标志 GB/T 12220
供货 GB/T 12252
压力试验 GB/T 13927

Design According to standard of GB/T 12238，API 609，MSS SP-67，MSS SP-68
Face to face GB/T 12221、JB/T 1688
End flange JB/T 78、JB/T 79
Symbol GB/T 12220
Supply GB/T 12252
Pressure test GB/T 13927

三千控制阀网
www.cv3000.com

驱动方式 Driving mode

手动、蜗轮传动、气动、电动。

Manual、worm-wheel、pneumatic、electric

主要零部件材料表 Standard material specifications for main parts

序 号 No.	零件名称 Part name	灰铸铁 Gray cast-iron	铸 钢 Cast steel	不锈钢 Stainless steel	
		Z	C	P	R
1	阀体、阀盖、阀瓣 Body 、bonnet、disc	HT250	WCB	CF8	CF8M
2	阀杆 Valve stem	35	1Cr13	1Cr18Ni9Ti	1Cr18Ni12M02Ti
3	衬里层 Lining layer	FEP(F_{46}) PFA PCTFE(F_3)			
4	隔膜 Diaphragm	FEP(F_{46}) /CR(氯丁橡胶) PFA(可溶性聚四氟乙烯)/FPDM(乙丙橡胶)			
5	阀杆螺母 Yoke nut	ZCuAl10Fe3			
6	螺栓 Bolt	35	35	1Cr17Ni2	1Cr17Ni2
7	螺母 Nut	45	45	0Cr18Ni9	0Cr18Ni9
8	手轮 Handwheel	HT200	HT200	WCC	WCC

衬氟隔膜阀
FLUORINE-LINING DIAPHRAGM VALVE

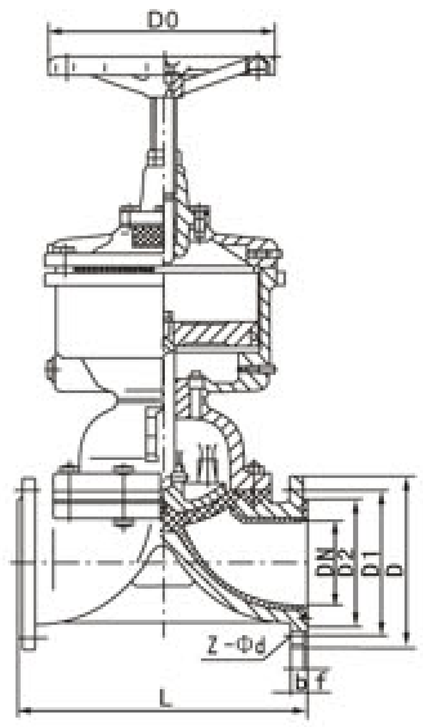

GS41 F3/F46 型 气动隔膜阀(往复式)
Pneumatic diaphragm valve(reciprocating type)

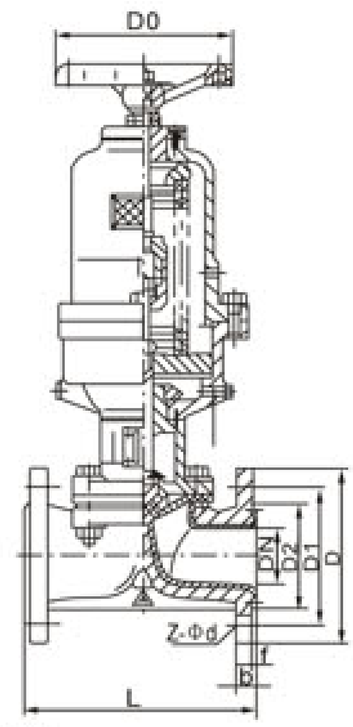

G6B41 F3/F46 型气动隔膜阀(常闭式)
Pneumatic diaphragm valve(normal close type)

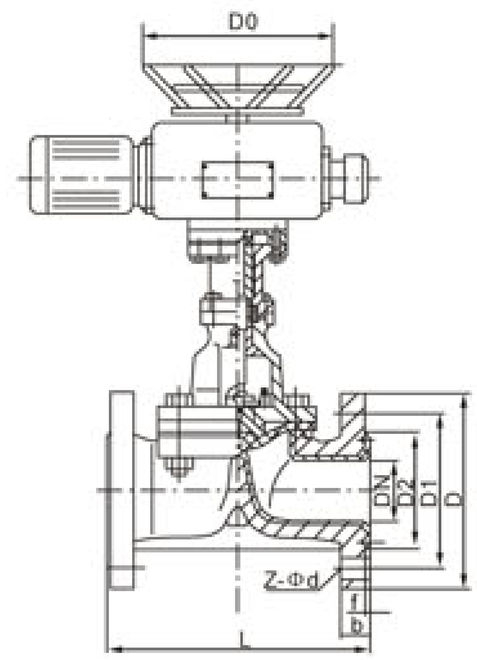

G941 F3/F46 型电动隔膜阀（堰式）
Electric diaphragm valve(weir type)

主要连接及外形尺寸 Main connection and external dimensions(mm)

公称通径 Norminal diameter DN(mm)	L	D	D_1	D_2	f	b	Z-Φd	D0	H_1	H_2	重量 Weight(kg)
	PN0.6(MPa)										
15	125/108	80	55	40	2	12	4-Φ12	100	105	110	3.5
20	135/117	90	65	50	2	14	4-Φ12	100	115	125	4
25	145/127	100	75	60	2	14	4-Φ12	120	120	135	5.5
32	160/146	120	90	70	2	16	4-Φ14	120	125	150	8
40	180/159	130	100	80	3	16	4-Φ14	140	135	175	11
50	210/190	140	110	90	3	16	4-Φ14	140	155	195	14
65	250/216	160	130	110	3	16	4-Φ14	200	170	200	23
80	300/254	185	150	125	3	18	4-Φ18	200	200	255	29
100	350/305	205	170	145	3	18	4-Φ18	280	270	325	46
125	400/356	235	200	175	3	20	8-Φ18	320	335	405	70
150	460/406	260	225	200	3	20	8-Φ18	320	370	450	95
200	570/521	315	280	255	3	22	8-Φ18	400	480	600	170
250	680/635	370	335	310	3	24	12-Φ18	500	545	620	270
300	790/749	435	395	362	4	24	12-Φ23	500	585	680	320

公称通径 Norminal diameter DN(mm)	L	D	D_1	D_2	f	b	Z-Φd	D_0	H_1	H_2	重量 Weight(kg)
	PN1.0(MPa)										
15	125/108	95	65	45	2	14	4-Φ14	100	105	110	3.5
20	135/117	105	75	55	2	16	4-Φ14	100	115	125	4
25	145/127	115	85	65	2	16	4-Φ14	120	120	135	5.5
32	160/146	135	100	78	2	18	4-Φ18	120	125	150	8
40	180/159	145	110	85	3	18	4-Φ18	140	135	175	11
50	210/190	160	125	100	3	20	4-Φ18	140	155	195	14
65	250/216	180	145	120	3	20	4-Φ18	200	170	200	23
80	300/254	195	160	135	3	22	4-Φ18	200	200	255	29
100	350/305	215	180	155	3	22	8-Φ18	280	270	325	46
125	400/356	245	210	185	3	24	8-Φ18	320	335	405	70
150	460/406	280	240	210	3	24	8-Φ23	320	370	450	95
200	570/521	335	295	265	3	26	8-Φ23	400	480	600	170
250	680/635	339	350	320	3	28	12-Φ23	500	545	620	270
300	790/749	440	400	368	4	28	12-Φ23	500	585	680	320

注：除非合同中另有要求，一般情况下，隔膜阀PN0.6MPa时，按PN1.0MPa法兰尺寸制造。*表中L值符合GB 12221规定系列，其中分子表示符合JB96系列。
Note: Normally, manufacturing according to PN1.0MPa flange dimension when diaphragm valve under PN0.6MPa, except there is additional requirements in contract.
*Value"L" is in accordance with GB 12221 series rules among which the numerator indication meets standard of JB96 series.

三千控制阀网 www.cv3000.com