FORCE & TORQUE®
福 斯 拓 科

# RH系列
# 液动（电液）执行器

# RH Series
# Hydraulic | Electro-Hydraulic Actuators

**无锡福斯拓科科技有限公司**

**Wuxi Force & Torque Technology Co., Ltd.**







无锡福斯拓科是一家专业生产角行程及直行程气动阀门执行器的国家高新技术企业，于2023年被评为江苏省专精特新企业。产品主要配套气动球阀，气动蝶阀，气动闸阀，气动截止阀等。 现有员工数量280人，年产值3.5亿元人民币，年产量达50万台。

| | | | |
|---|---|---|---|
| **35,000 m²** | **500,000+ Units** | **50 Million USD** | **20+ Years** |
| **Workshop** | **Yearly Capacity** | **Annual Turnover** | **Expertise** |

- ISO9001, ISO14001, ISO45001
- SIL3 and ATEX by TUV Rheinland
- DNV Type Approval
- ROHS, REACH by SGS
- EAC CU-TR 010, CU-TR 012, CU-TR 032
- CE, PED etc.
- Blasting Testing Report
- Cycle Testing Report
- -40℃ and -60℃ Testing Report
- ISO12944 C4, C5, C5M Testing by SGS
- Radiation Protection Testing etc.

# RH系列液动（电液）执行器
# RH Series
# Hydraulic | Electro-Hydraulic Actuator

**液动执行器**
**Hydraulic actuator**

**浸没式液动执行器**
**Submerged hydraulic actuator**

**电液执行器**
**Electro-hydraulic actuator**

## 产品概述 Product Overview

RH系列角行程液压执行器是专门设计用于操作球阀、蝶阀、旋塞阀和其他回转阀门，以进行开/关或调节控制。该产品集成液压微型动力单元，液压执行器为一体的高端执行部件。无需外接油管，只需提供电源就可对阀门进行驱动，并可通过网络实现远程对阀门集中控制。

The RH series angle-travel hydraulic actuators are specifically designed to operate ball valves, butterfly valves, plug valves and other rotary valves for opening / closing or regulating control.

This product integrates a hydraulic micro power unit and a hydraulic actuator into one high-end actuating component. No external oil pipe is required. The valve can be driven simply by providing power, and remote centralized control of the valve can be achieved through the network.

## 产品组成 Main Components

### ① 指示器 Indicator
NAMUR标准指示器便于安装位置开关等附件。
NAMUR indicator for easy mounting of accessories such as limit switch etc.

### ② 限位凸轮 Cam
镀镍合金钢，定位精准
Nickel-plated alloy steel, precise positioning.

### ③ 驱动轴 Pinion Shaft
镀镍合金钢制成的高精密一体式输出轴同时符合NAMUR、ISO5211、DIN3337标准。尺寸和材质可定制。
The high-precision integrated output shaft made of nickel-plated alloy steel complies with the standards of NAMUR, ISO5211 and DIN3337 simultaneously. The size and material can be customized.

### ④ 旁通阀块 Bypass valve block
由镀锌合金钢制成，可实现手动自动控制模式切换
Made of galvanized alloy steel, it can achieve the switching between manual and automatic control modes

### ⑤ 箱体 Body
球墨铸铁QT450-10浇铸，环氧树脂喷涂。
Ductile iron QT450-10 is integrally cast and coated with epoxy resin.

### ⑥ 缸盖 End cap
采用合金钢，表面环氧树脂喷涂。
Made of alloy steel, coated with epoxy.

### ⑦ 活塞 Piston
活塞齿条为合金钢镀镍处理，动作迅速，使用寿命长。
The piston rack is made of alloy steel with nickel plating which operates quickly and has a long service life.

### ⑧ 限位螺钉 Stop screw
两个独立的行程调节螺钉可以对阀门的开位和关位进行精准的±5°的调节。
The two independent external travel stop bolts can adjust ±5° at both open and close directions easily and precisely.

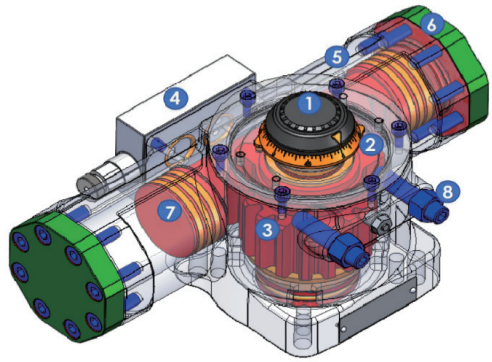


## 产品特点 Product Features

- 液压缸一体浇铸而成，减少液压油泄漏风险。
- The hydraulic cylinder is integrally cast to reduce the risk of hydraulic oil leakage
- 体积小、输出扭矩大、压力可选范围大。
- Small sizes, large output torque, wide rang.
- 齿轮齿条内置凸轮限位结构设计避免了液压油泄漏风险。
- The built-in CAM limit structure design of the rack and pinion avoids the risk of hydraulic oil leakage.
- 多种安装方式适用于各种场合的阀门控制。
- Multiple installation methods are suitable for valve control in various occasions.
- 角行程双作用液压执行器具备现场应急操作功能，在应急情况下（故障或断电）,可通过应急手动泵来开关阀门。
- The angle-travel double-acting hydraulic actuator is equipped with on-site emergency operation functions. In emergency situations (such as faults or power outages), the valve can be opened and closed through the emergency manual pump.

# 部件与材料 Parts & Materials

FORCE & TORQUE 福斯拓科

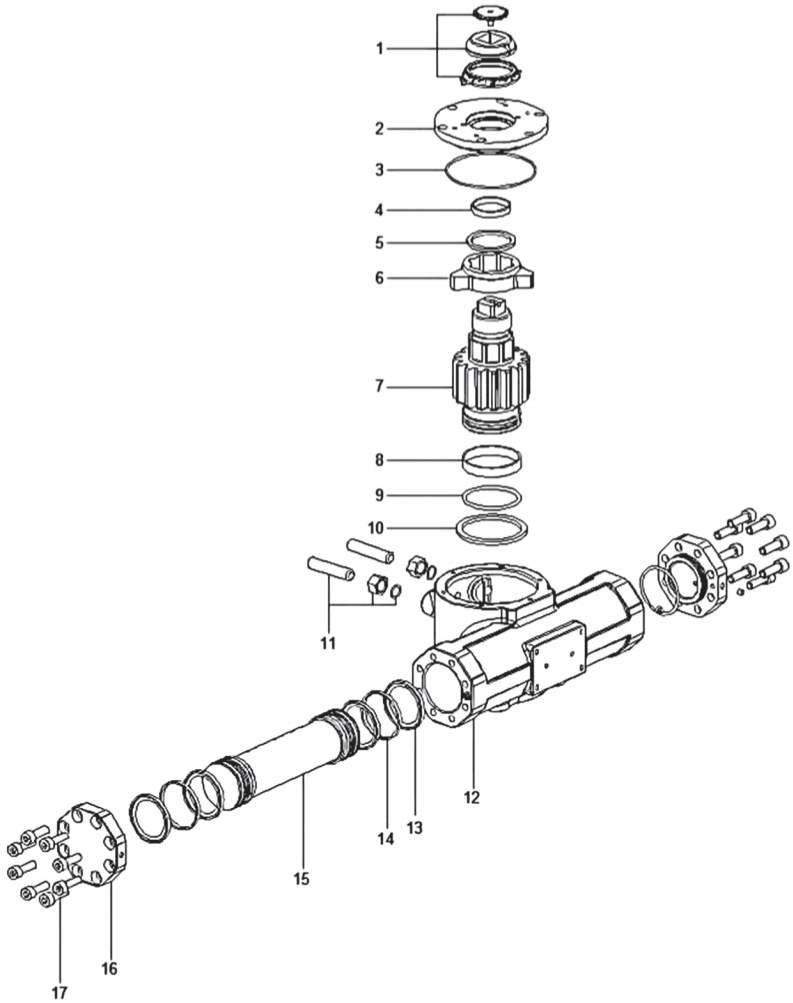


| 序号 Part NO. | 名称 Part Name | 材料 Material |
|---|---|---|
| 1 | 指示器 Inducator | 工程塑料 Engineering plastic |
| 2 | 顶盖 Top cover | 碳钢 Carbon steel |
| 3 | 顶盖O形圈 Top cover O-ring | 丁腈橡胶 NBR |
| 4 | 上轴支承环 Upper shaft support ring | 工程塑料 Engineering plastic |
| 5 | 上轴垫片 Upper shaft gasket | 工程塑料 Engineering plastio |
| 6 | 凸轮 Cam | 合金钢 Alloy steel |
| 7 | 齿轮轴 Shaft | 合金钢 Alloy steel |
| 8 | 下轴支承环 Lower shaft support ring | 工程塑料 Engineering plastic |
| 9 | 下轴O形圈 Upper shaft O-ring | 丁腈橡胶 NBR |
| 10 | 下轴垫片 Lower shaft gasket | 工程塑料 Engineering plastic |
| 11 | 调节螺栓组件 Adiusting bolt assembly | 丁腈橡胶，碳钢 NBR, Carbon steel |
| 12 | 箱体 Body | 球墨铸铁 Ductile Iron |
| 13 | 活塞密封圈 Piston O-ring | 丁腈橡胶 NBR |
| 14 | 活塞支承环 Piston bearing | 工程塑料 Engineering plastic |
| 15 | 活塞 Piston | 碳钢 Carbon steel |
| 16 | 缸盖 End caps | 碳钢 Carbon steel |
| 17 | 缸盖螺钉 End cap screws | 碳钢 Carbon steel |

# 液动执行器 Hydraulic

## 技术指标

- 执行机构：双作用，单作用
- 使用环境：干式、浸没式
- 防护等级：IP67、IP68 (水下30米长期浸没)
- 工作温度：-20℃~+60℃
- 控制方式：开关型、调节型
- 阀位指示：就地、远程指示 (选配)
- 工作压力：63Bar 到 250Bar
- 转度：90°±5°
- 材质：QT450-10 或碳钢
- 涂层：环氧树脂

## Technical Conditions

- Actuator systems: double-acting;
- Operating environment: for dry and submerged
- Protection: IP67, IP68 (long-term immersion at 30 meters underwater)
- Operating temperature: -20℃~+60℃
- Control mode: On/Off, Modulating
- Position indication: local, remote indication (optional)
- Working pressure: 63Bar ~ 250Bar
- Rotation: 90°±5°
- Material: QT450-10 or carbon steel
- Coating: epoxy resin

# 液动执行器 Hydraulic

FORCE & TORQUE 福斯拓科

## 外形尺寸 Dimensions (mm)

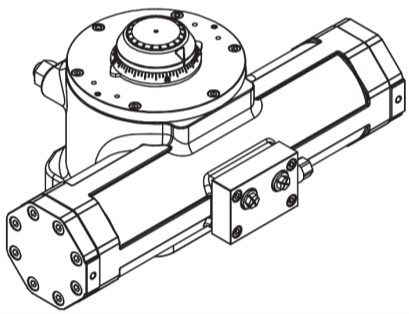

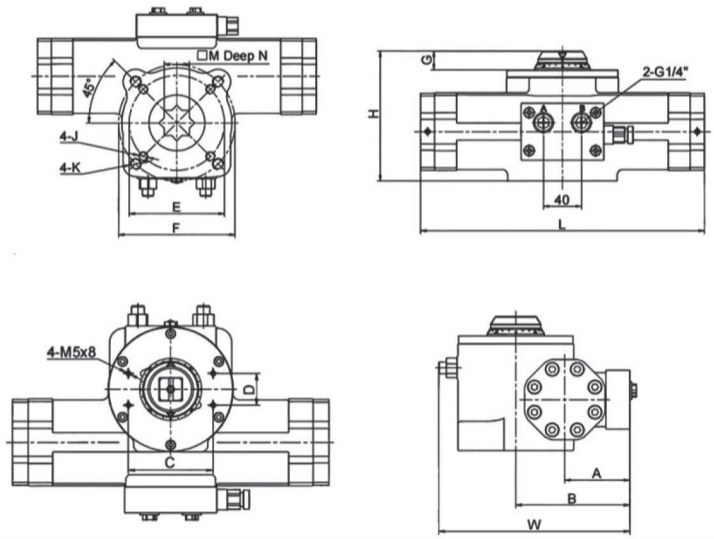


| Model | Cylinder | A | B | C | D | E | F | G | H | J | K | L | M | N | W |
|---|---|---|---|---|---|---|---|---|---|---|---|---|---|---|---|
| RH0019 | Ø30 | 63.5 | 98 | 30 | 80 | Ø50 | Ø70 | 20 | 103 | M6x10 | M8x12 | 245 | 17 | 21 | 162 |
| RH0038 | Ø40 | 61 | 104.5 | 30 | 80 | Ø70 | Ø102 | 20 | 124.5 | M8x12 | M10x15 | 290 | 22 | 26 | 185 |
| RH0073 | Ø52 | 66 | 116 | 30 | 80 | Ø102 | Ø125 | 20 | 137 | M10x15 | M12x18 | 299 | 27 | 31 | 195 |
| RH0150 | Ø65 | 76 | 139 | 30 | 130 | – | Ø140 | 30 | 184 | – | M16x24 | 410 | 36 | 40 | 249 |
| RH0300 | Ø85 | 91 | 171 | 30 | 130 | Ø165 | Ø215 | 30 | 228.5 | M20x30 | M20x30 | 506 | 46 | 50 | 316.5 |
| RH0680 | Ø120 | 112 | 209 | 30 | 130 | Ø165 | Ø254 | 30 | 274 | M20x30 | 8-M16x24 | 592 | 55 | 60 | 377 |

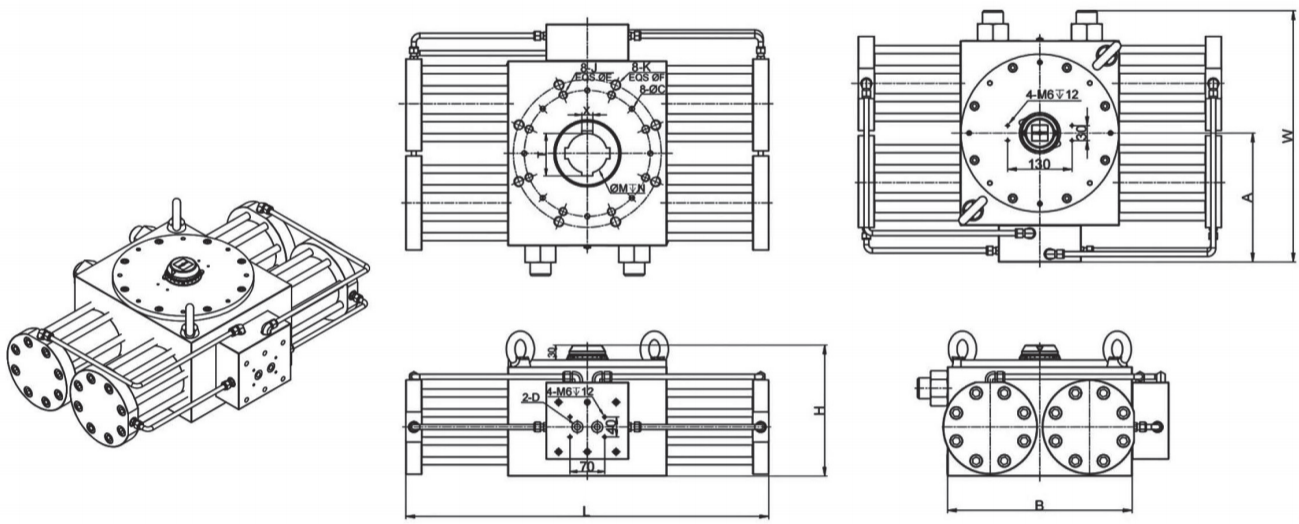


| Model | Cylinder | A | B | C | D | E | F | H | J | K | L | M | N | W | X | T |
|---|---|---|---|---|---|---|---|---|---|---|---|---|---|---|---|---|
| RH1200 | Ø100 | 260 | 372 | 10x12 | G1/4″ | 254 | 298 | 264 | M16x24 | M20x30 | 731 | Ø80 | 130 | 507 | 22 | 85.4 |
| RH2300 | Ø125 | 321 | 472 | 10x12 | G3/8″ | 298 | 356 | 312 | M20x30 | M30x45 | 921 | Ø120 | 130 | 630 | 32 | 127.4 |

## 外形尺寸 Dimensions (mm)

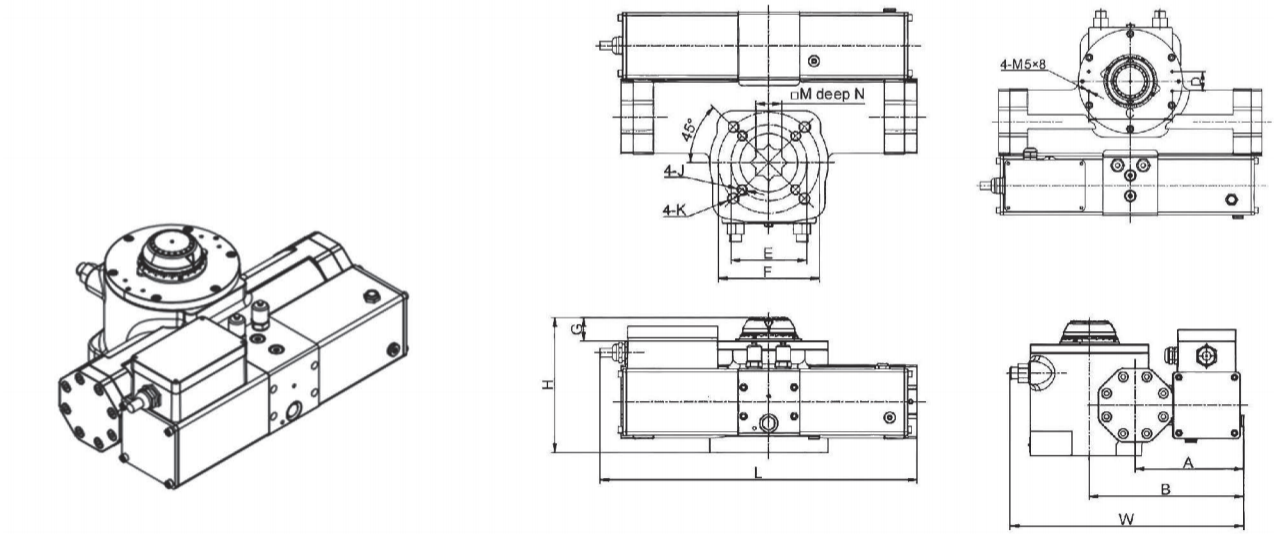


| Model | Cylinder | A | B | C | D | E | F | G | H | J | K | L | M | N | W |
|---|---|---|---|---|---|---|---|---|---|---|---|---|---|---|---|
| RH019DAE | Ø30 | 63.5 | 98 | 30 | 80 | Ø50 | Ø70 | 20 | 103 | M6x10 | M8x12 | 245 | 17 | 21 | 162 |
| RH0038DAE | Ø40 | 61 | 104.5 | 30 | 80 | Ø70 | Ø102 | 20 | 124.5 | M8x12 | M10x15 | 290 | 22 | 26 | 185 |
| RH0073DAE | Ø52 | 66 | 116 | 30 | 80 | Ø102 | Ø125 | 20 | 137 | M10x15 | M12x18 | 299 | 27 | 31 | 195 |
| RH0150DAE | Ø65 | 76 | 139 | 30 | 130 | – | Ø140 | 30 | 184 | – | M16x24 | 410 | 36 | 40 | 249 |
| RH0300DAE | Ø85 | 91 | 171 | 30 | 130 | Ø165 | Ø215 | 30 | 228.5 | M20x30 | M20x30 | 506 | 46 | 50 | 316.5 |
| RH0680DAE | Ø120 | 112 | 209 | 30 | 130 | Ø165 | Ø254 | 30 | 274 | M20x30 | 8-M16x24 | 592 | 55 | 60 | 377 |

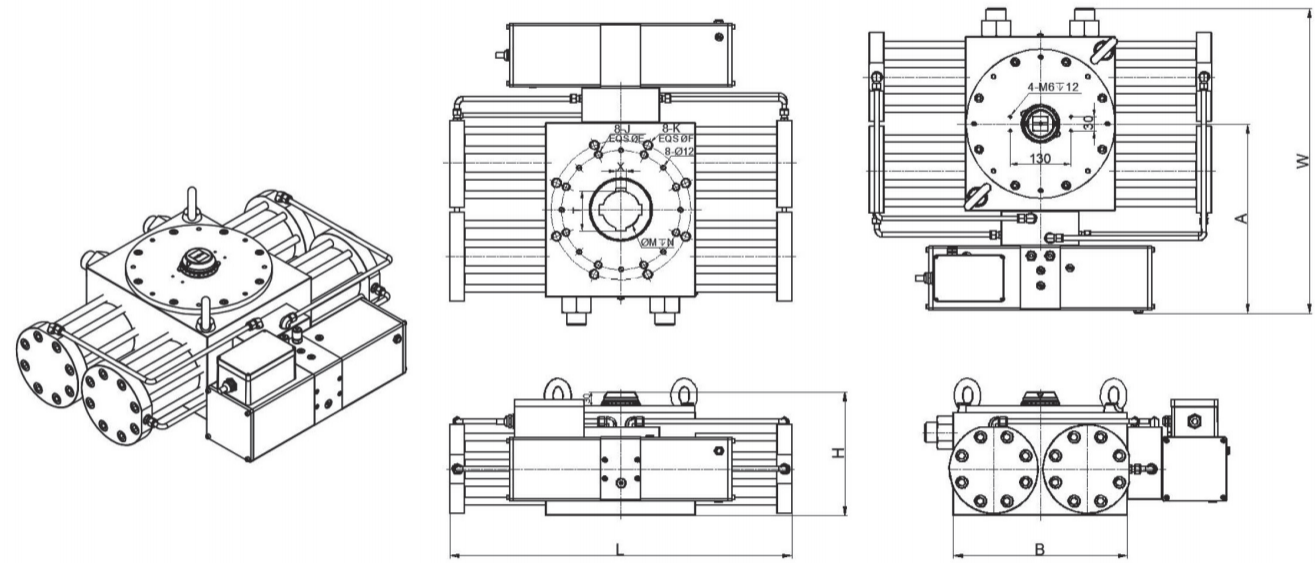


| Model | Cylinder | A | B | E | F | H | J | K | L | M | N | W | X | T |
|---|---|---|---|---|---|---|---|---|---|---|---|---|---|---|
| RH1200DAE | Ø100 | 405 | 372 | 254 | 298 | 264 | M16x24 | M20x30 | 731 | Ø80 | 130 | 652 | 22 | 85.4 |
| RH2300DAE | Ø125 | 466 | 472 | 298 | 356 | 312 | M20x30 | M30x45 | 921 | Ø120 | 130 | 776 | 32 | 127.4 |

# 工作原理 Working Principle

## 液压原理 Hydraulic Principle

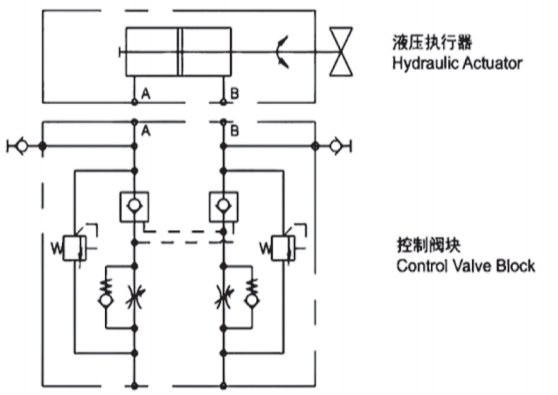


## 电气原理 Electrical Principle

■ 开关量控制型
On-off control type

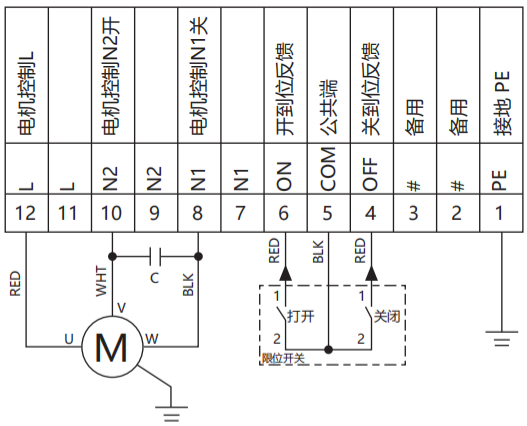


■ 开度量控制型
Opening control type

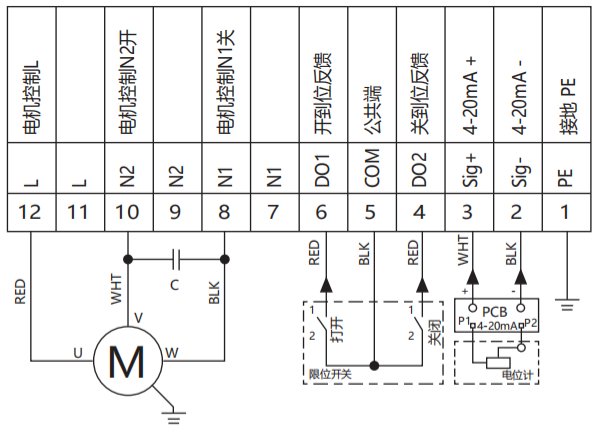


■ 双CAN总线型
Dual can bus

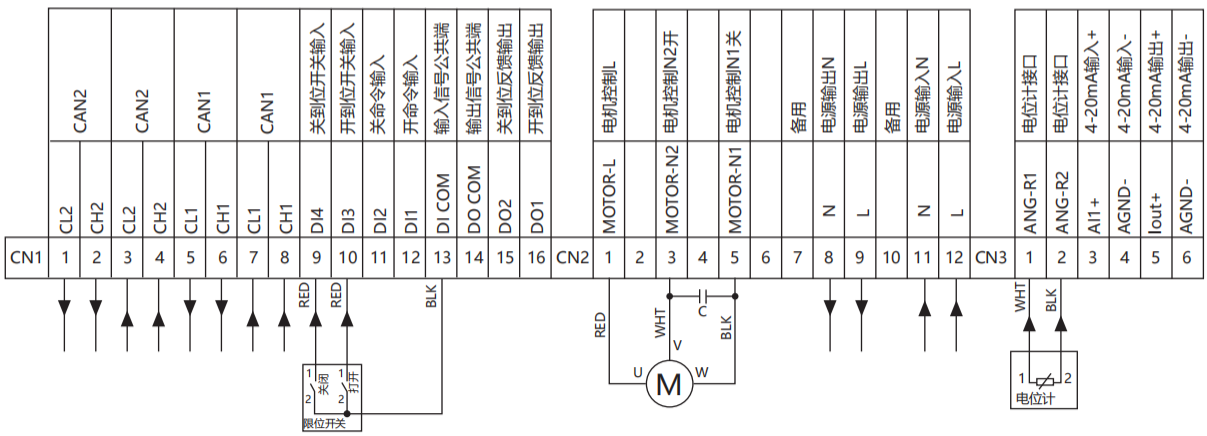

# 扭矩及选型 Torque & Sizing

## 扭矩表 Torque Table

| 型号 Model | 缸径 Cylinder | 油压 Oil supply pressure (Unit: MPa) | | | | | | |
|---|---|---|---|---|---|---|---|---|
| | | 10 | 11 | 12 | 13 | 14 | 15 | 20 |
| RH0019DA | Ø30 | 188 | 207 | 226 | 244 | 263 | 282 | 376 |
| RH0038DA | Ø40 | 382 | 420 | 458 | 496 | 535 | 572 | 764 |
| RH0073DA | Ø52 | 726 | 799 | 871 | 944 | 1016 | 1089 | 1452 |
| RH0150DA | Ø65 | 1512 | 1664 | 1815 | 1966 | 2117 | 2269 | 3025 |
| RH0300DA | Ø85 | 3017 | 3319 | 3621 | 3923 | 4224 | 4526 | 6035 |
| RH0680DA | Ø120 | 6873 | 7560 | 8247 | 8935 | 9622 | 10390 | 13746 |
| RH1200DA | Ø100 | 11930 | 13123 | 14316 | 15509 | 16702 | 17895 | 23864 |
| RH2300DA | Ø125 | 26100 | 28710 | 31320 | 33930 | 36540 | 39150 | 52202 |

## 重量表 Weight Table

| Model | RH0019 | RH0038 | RH0073 | RH0150 | RH0300 | RH0680 | RH1200 | RH2300 |
|---|---|---|---|---|---|---|---|---|
| Wt. (DA) | 8 | 13 | 17 | 37 | 75 | 138 | 265 | 495 |

## 型号命名 How to order

角行程执行器 Rotary actuator　R　H　0150　DA　E　□　□

液压 Hydraulic

输出扭矩:
Output Torque:
@10Mpa

0019: 188Nm, 0038: 382Nm, 0073: 726Nm,
0150: 1512Nm, 0300: 3172Nm, 0680: 6873Nm...

作用形式:
Acting type:

SR: 单作用
SR: Spring Return

DA: 双作用
DA: Double Acting

电控
Electrically controlled

使用环境:
Operating Environment:

省略: 干区
Omit: Dry

S: 浸没式
S: Submerged

反馈信号:
Feedback:

O: 开/关量
ON/OFF

S: 模拟量 (4-20mA)
Analog (4-20mA)

B2: 双CAN总线
Double CAN Bus

# HMPU液压微型动力单元
# Hydraulic Micro Power Unit

FORCE & TORQUE
福 斯 拓 科

## 概述 Overview

液压微型动力单元只需为电机供电就可输出液压动力源，广泛应用于小流量、高压力、无液压动力源场所和安装空间有限的液压系统中。

Hydraulic power can be output simply by supplying power to the hydraulic micro power unit. It is widely applied in hydraulic systems with small flow rates, high pressure, no hydraulic power sources and limited installation space.

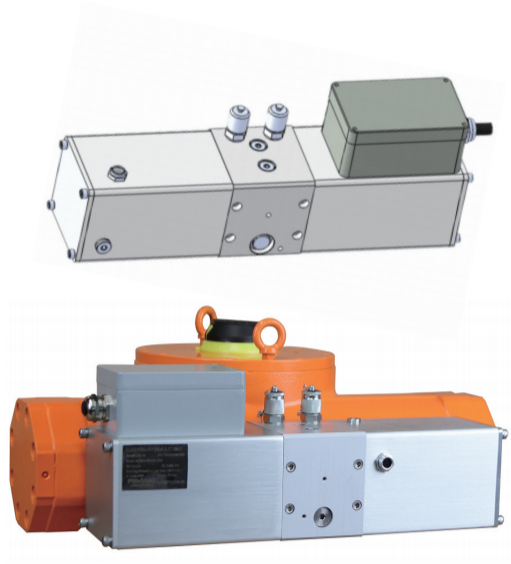

## 产品组成 Main Components

液压微型动力单元采用模块设计的结构形式，主要由以下零部件组成。

Module hydraulic micro power unit adopts module design is mainly composed of the following parts.

- 电机
  Motor
- 油箱
  Oil Tank
- 液压锁
  Hydraulic lock
- 齿轮泵
  Gear pump
- 溢流阀
  Relief valve
- 接线盒
  Wiring box

## 产品特点 Features

- 同一外形，多种流量规格，可满足不同客户需求；
  One model covers multiple flow specifications;
- 输出压力范围大，最高可达200Bar；
  The output pressure up to 200Bar;
- 安装位置和角度不限，可任意安装。
  Unlimited installation position and Angle.

# HMPU液压微型动力单元
# Hydraulic Micro Power Unit

## 技术指标 Technical Conditions

- 防护等级：IP6X, IPX8
  Protection grade: IP6X, IPX8
- 安装角度：任意
  Installation: arbitrary
- 安装方式：贴装 / 管接
  Mounting: Plate / Pipe
- 工作温度：-20℃~+60℃
  Operating temperature:-20℃~+60℃
- 油泵形式：径向柱塞泵
  Pump type:radial piston pump
- 油泵体材质：铝合金
  Pump body material：aluminum alloy
- 工作压力：详见液压特征曲线表
  Working pressure：see hydraulic characteristic curve table for details
- 最大输出压力：200Bar
  Maximum pressure: 200Bar
- 油液排量：详见液压特征曲线表
  Oil displacement: see hydraulic characteristic curve table for details
- 输出方向：正、反双向输出
  Output direction: Bidirectional output in both forward and reverse directions
- 油箱容积：0.3L-1L
  Tank volume：0.3L-1L
- 工作介质：矿物油，符合DIN51524 (如需使用规格液压油请向我们咨询。)
  Medium：mineral oil according to DIN 51524 (other media on request)
- 工作电压：AC220V50/60Hz/DC24V
  Working voltage：A220V 50/60Hz/DC24V
- 额定电流：1.5A (350W) , 2.5A (500W) , ≤5.5A(750W)
  Rated current: 1.5A (350W) , 2.5A (500W), ≤5.5A (750W)
- 启动电流：≤3A (350W) , ≤5A (500W), ≤12A (750W)
  Starting current: ≤3A (350W) , ≤5A (500W), ≤12A (750W)
- 工作模式：S3-10%-30min
  Working mode：S3-10%-30min
- 过载温度保护：140℃
  Overload protection：140℃

# HMPU液压微型动力单元
# Hydraulic Micro Power Unit

FORCE & TORQUE 福斯拓科

## 液压原理
## Hydraulic Principle

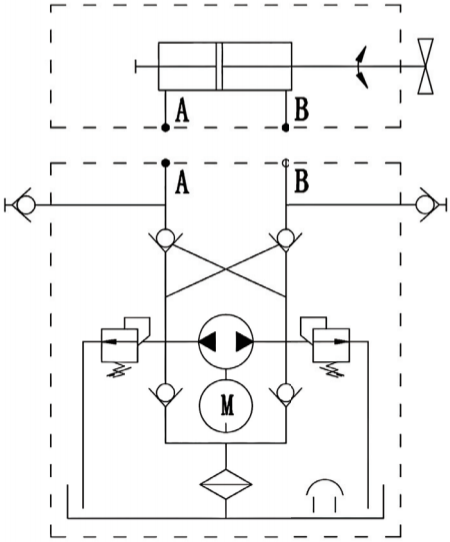


## 液压特性曲线
## Hydraulic Curves

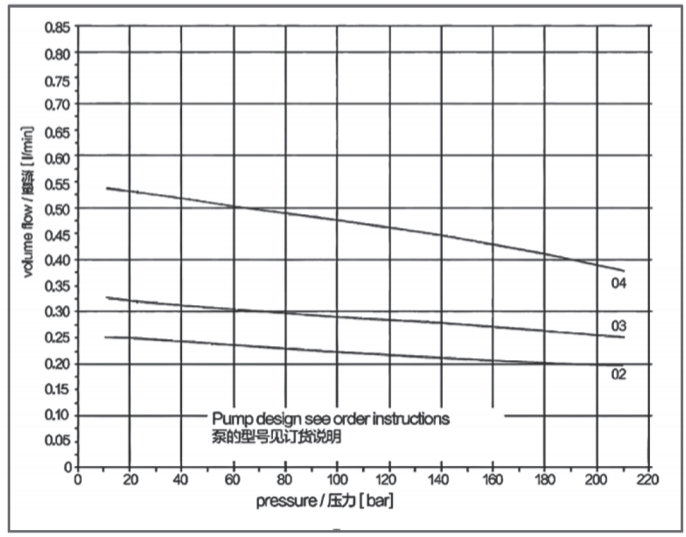


## 型号命名 How to order

| | | | | HMPU | 01 | A | D |
|---|---|---|---|---|---|---|---|
| 01：额定转速 1400 rpm<br>Rated speed 1400 rpm | 油泵排量 0.63CC/R<br>displacement 0.63CC/R | 功率 350W<br>P=350W | 启动电容 10μF<br>C=10μF | | | | |
| 02：额定转速 1400 rpm<br>Rated speed 1400 rpm | 油泵排量 0.88CC/R<br>displacement 0.88CC/R | 功率 500W<br>P=500W | 启动电容 16μF<br>C=16μF | | | | |
| 03：额定转速 1350 rpm<br>Rated speed 1350 rpm | 油泵排量 1.25CC/R<br>displacement 1.25CC/R | 功率 750W<br>P=750W | 启动电容 30μF<br>C=30μF | | | | |
| 注：04*请咨询我们<br>04* On request | | | | | | | |
| 电机选型：<br>Motor Selection | A：单相电机 AC220V 50/60HZ 1-Phase motor@AC220V 50/60HZ<br>B：直流电机 DC24V Direct current moto@DC24V | | | | | | |
| D：双作用<br>Double Acting | S：单作用<br>Single Acting | | | | | | |

# 单作用液动执行器
# Spring Return Hydraulic Actuator

## 单作用液压执行器扭矩表
## Torque for Spring Return Hydraulic Actuator

Unit: Nm

| 型号 Model | 缸径 Cylinder | 弹簧扭矩 Spring Torque | | 液压输出扭矩 Hydraulic Torque Output | | | |
|---|---|---|---|---|---|---|---|
| | | | | 10Mpa | | 12Mpa | |
| | | Start | End | Start | End | Start | End |
| RH0019SR | Ø30 | 135 | 90 | 98 | 53 | 135 | 90 |
| RH0038SR | Ø40 | 275 | 183 | 199 | 107 | 275 | 183 |
| RH0073SR | Ø52 | 523 | 349 | 378 | 203 | 523 | 349 |
| RH0150SR | Ø65 | 1089 | 726 | 787 | 424 | 1089 | 726 |
| RH0300SR | Ø85 | 2174 | 1449 | 1570 | 845 | 2174 | 1449 |
| RH0680SR | Ø120 | 4951 | 3301 | 3576 | 1925 | 4951 | 3301 |

# 产品范围
# Product Range

FORCE & TORQUE
福 斯 拓 科